MATERIAL:
PER COMPONENT
FINISH:
WEIGHT:
206189.94 gm

REVISIONS				
ZONE	REV.	DESCRIPTION	DATE	APPROVED

NOTES:

1. ITEM 4 AND 5 ARE CUSTOM THICKNESS BASED ON SPECIFIC OPTICAL CHARACTERISTICS OF LENS GROUP.

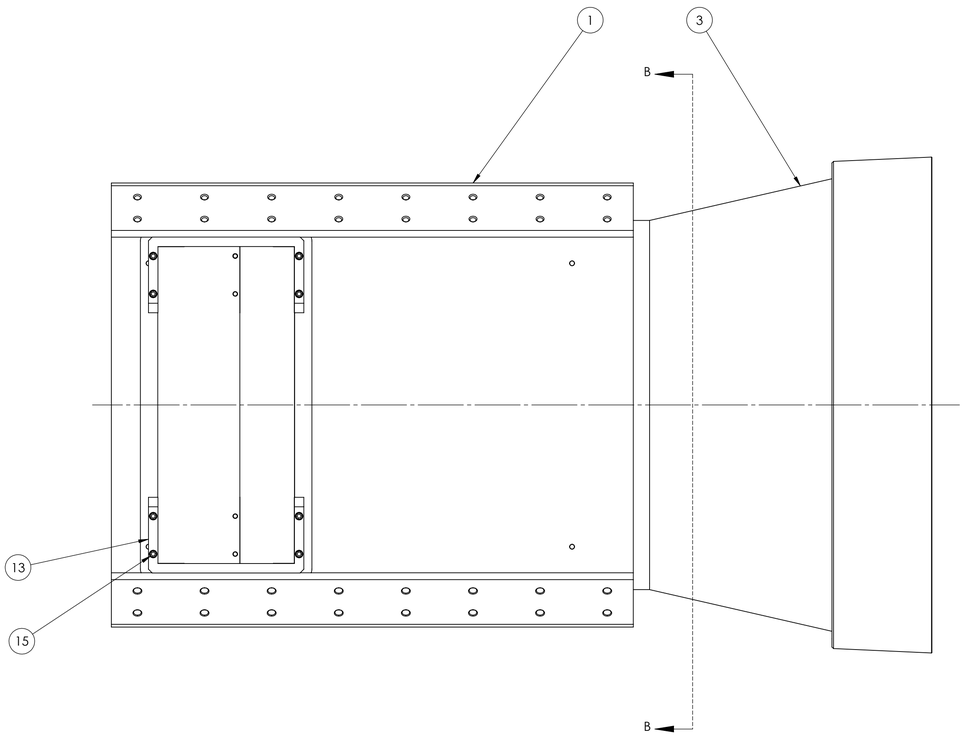

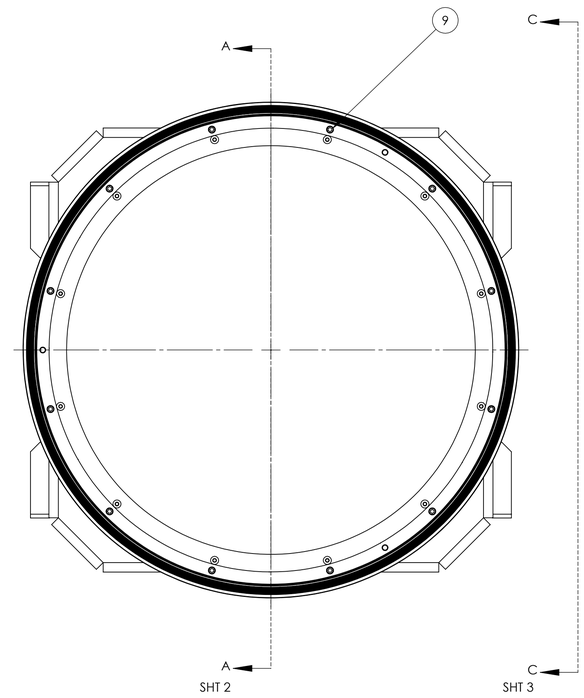

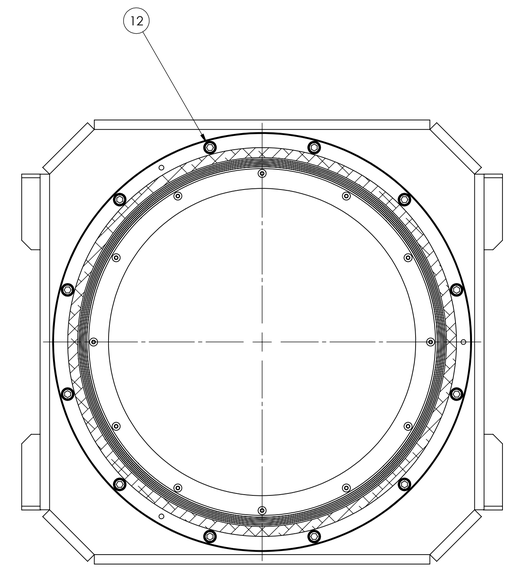

SECTION B-B
SCALE 1 : 4

ITEM NO.	PART NUMBER	DESCRIPTION	QTY.
1	ASM-100082	PFC HOUSING TOP ASSEMBLY	1
2	PRT-100073	LENS NO. 2 & 3 HOUSING	1
3	PRT-100072	LENS NO. 1 CELL HOUSING	1
4	PRT-100092	SHIM, LENS NO. 3 LENS CELL	1
5	PRT-100093	SHIM, LENS NO. 2 LENS CELL	1
6	ASM-100095	LENS NO. 1 ASSEMBLY	1
7	ASM-100096	LENS NO. 2 ASSEMBLY	1
8	ASM-100109	LENS NO. 3 ASSEMBLY	1
9	.250-20 SHCS	.250-20 X .75" LG SS SHCS	12
10	.250-20 SHCS	.250-20 X 1.00" LG SS SHCS	24
11	.375-16 SHCS	.375-16 SHCS X 1.00" LG	12
12	.375-16 SHCS	.375-16 X 1.25" LG SS SHCS	12
13	PRT-100111-1	FILTER/SHUTTER SIDE BRACKET	2
14	PRT-100111-2	SHUTTER SIDE BRACKET	2
15	.250-20 SHCS	.250-20 X 1.25" LG SS SHCS	16

PROPRIETARY RIGHTS are included in all the information disclosed herein. This information is submitted in confidence, and neither this document nor the information disclosed herein shall be reproduced or transferred to any other document, nor shall it be used or disclosed to any person for manufacturing or any other reason except as specifically authorized in writing by C P Systems, Inc.

© 2011 C P Systems, Inc.

THIRD ANGLE PROJECTION

TRIANGULAR FLAG NOTE DENOTES CHANGE FROM PREVIOUS REVISION LEVEL

DO NOT SCALE DRAWING

INTERPRET DRAWING IN ACCORDANCE WITH ASME Y14.5M-1994

NEXT ASSY	USED ON
ASM-100146	KMTNet

UNLESS OTHERWISE NOTED:

ALL DIMENSIONS ARE IN MILLIMETERS AND ARE AFTER APPLIED FINISHES

TOLERANCES:

.X: ± .25 .XXX: ± .05
.XX: ± .13 ANGLES: ± 0°30'

ALL PARTS TO BE FREE OF BURRS AND SHARP EDGES

DRAWN: R. PRICE	DATE: 04 OCT 2011		
CHECKED:	DATE:		
ENGINEERING:	DATE:		
MANUFACTURING:	DATE:		
APPROVED:	DATE:		

C P SYSTEMS, INC.

P.O. BOX 780, 20705 E. MARSH STATION RD., VAIL, AZ 85641

TITLE:

PRIME FOCUS CORRECTOR ASSEMBLY

SCALE: 1:10	SIZE: D	DRAWING NO.: ASM-100060	REV.: REL-A
SHEET: 1 OF 3			

REV REL-A
SIZE: D DRAWING NO.: ASM-100060

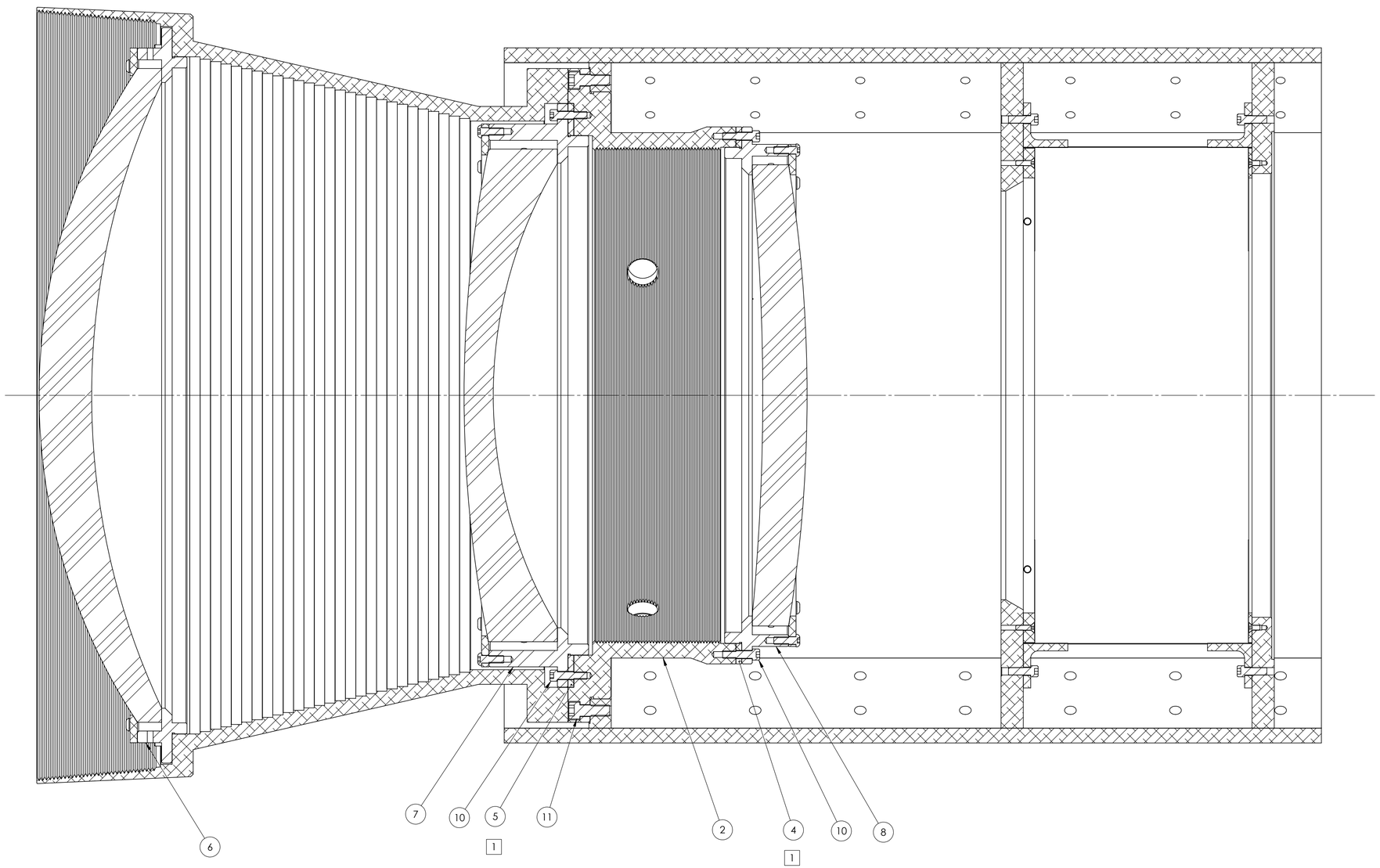

SECTION A-A
SCALE 1 : 2
FROM SHT 1

PROPRIETARY RIGHTS are included in all the information disclosed herein. This information is submitted in confidence, and neither this document nor the information disclosed herein shall be reproduced or transferred to any other document, nor shall it be used or disclosed to any person for manufacturing or any other reason except as specifically authorized in writing by C P Systems, Inc.

© 2011 C P Systems, Inc.

C P SYSTEMS, INC.

P.O. BOX 780, 20705 E. MARSH STATION RD., VAIL, AZ 85641

SCALE: 1:10	SIZE: D	DRAWING NO.: ASM-100060	REV.: REL-A
SHEET: 2 OF 3			

REV.: REL-A
SIZE: D DRAWING NO.: ASM-100060

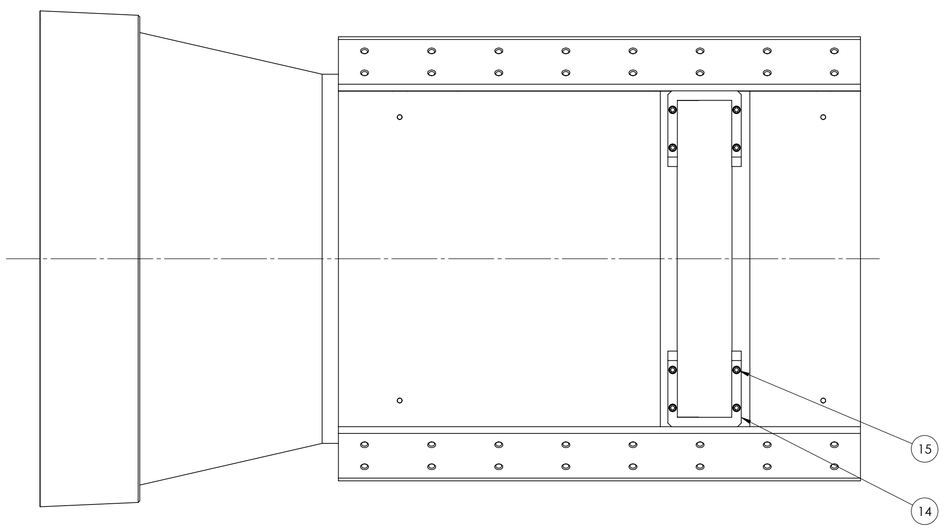

VIEW C-C
SCALE 1 : 4
FROM SHT 1

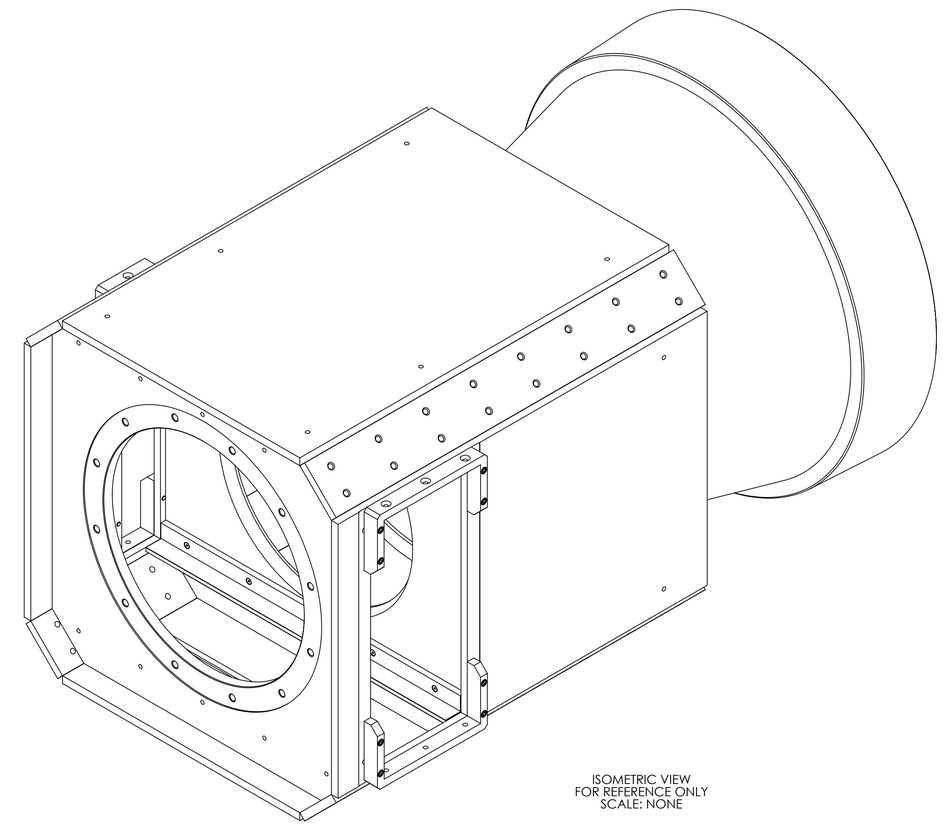

ISOMETRIC VIEW
FOR REFERENCE ONLY
SCALE: NONE

PROPRIETARY RIGHTS are included in all the information disclosed herein. This information is submitted in confidence, and neither this document nor the information disclosed herein shall be reproduced or transferred to any other document, nor shall it be used or disclosed to any person for manufacturing or any other reason except as specifically authorized in writing by C P Systems, Inc.

© 2011 C P Systems, Inc.

C P SYSTEMS, INC.

P.O. BOX 780, 20705 E. MARSH STATION RD., VAIL, AZ 85641

SCALE: 1:10	SIZE: D	DRAWING NO.: ASM-100060	REV.: REL-A
SHEET: 3 OF 3			

REV.: REL-A
SIZE: D DRAWING NO.: ASM-100060

MATERIAL:
PER COMPONENT
FINISH:
-
WEIGHT:
78856.27 gm

REVISIONS				
ZONE	REV.	DESCRIPTION	DATE	APPROVED

NOTES:

1. INSERT ∅ .250 DOWEL PINS TO REGISTER PARTS PRIOR TO WELDING
2. STRESS RELIEVE ASSEMBLY AFTER WELDING

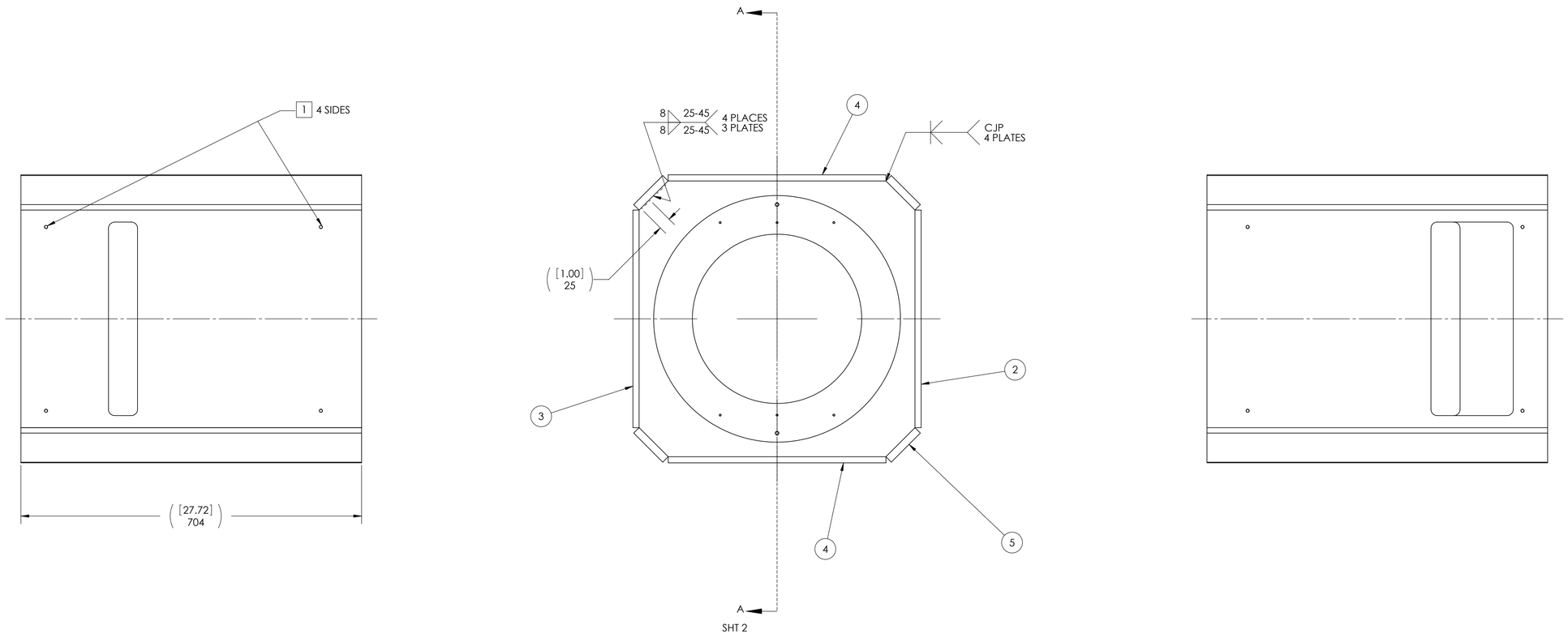

ITEM NO.	PART NUMBER	DESCRIPTION	Default/ QTY.
1	PRT-100069	LENS PLATE NO. 1	1
2	PRT-100067-2	SIDE PLATE - FILTER/SHUTTER OPENING	1
3	PRT-100067-3	SIDE PLATE - SHUTTER OPENING	1
4	PRT-100067-1	SIDE PLATE - BLANK	2
5	PRT-100068	VANE PLATE	4
6	PRT-100070	LENS PLATE NO. 2	1
7	PRT-100071	LENS PLATE NO. 3	1

PROPRIETARY RIGHTS are included in all the information disclosed herein. This information is submitted in confidence, and neither this document nor the information disclosed herein shall be reproduced or transferred to any other document, nor shall it be used or disclosed to any person for manufacturing or any other reason except as specifically authorized in writing by C P Systems, Inc.

© 2011 C P Systems, Inc.

THIRD ANGLE PROJECTION

TRIANGULAR FLAG NOTE DENOTES CHANGE FROM PREVIOUS REVISION LEVEL

DO NOT SCALE DRAWING

INTERPRET DRAWING IN ACCORDANCE WITH ASME Y14.5M-1994

ASM-100078	KMTNet
NEXT ASSY	USED ON

UNLESS OTHERWISE NOTED:

ALL DIMENSIONS ARE IN MILLIMETERS AND ARE AFTER APPLIED FINISHES

TOLERANCES:

.X: ± .25 .XXX: ± .05
.XX: ± .13 ANGLES: ± 0°30'

ALL PARTS TO BE FREE OF BURRS AND SHARP EDGES

DRAWN: R. PRICE	DATE: 29 SEPT 2011		
CHECKED:	DATE:		
ENGINEERING:	DATE:		
MANUFACTURING:	DATE:		
APPROVED:	DATE:		

C P SYSTEMS, INC.

P.O. BOX 780, 20705 E. MARSH STATION RD., VAIL, AZ 85641

TITLE:

PFC HOUSING - WELDMENT

SCALE: 1:5	SIZE: D	DRAWING NO.: ASM-100066	REV.: REL-A
SHEET: 1 OF 2			

REV REL-A

SIZE: D DRAWING NO.: ASM-100066

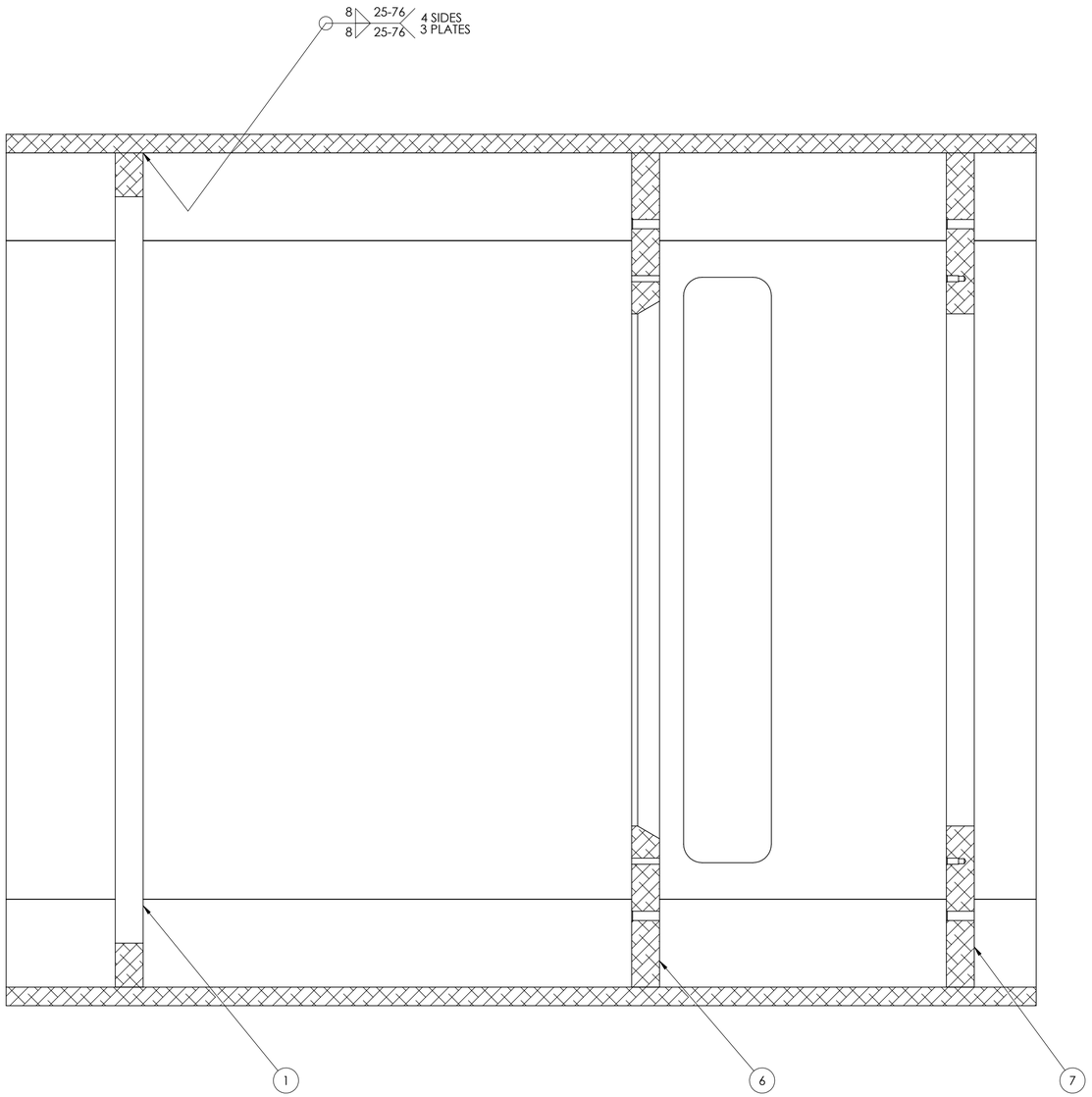

SECTION A-A
SCALE 1 : 2

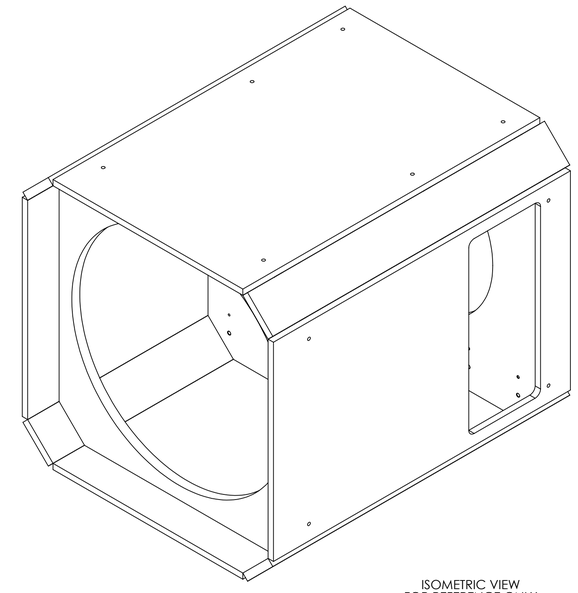

ISOMETRIC VIEW
FOR REFERENCE ONLY
SCALE: NONE

PROPRIETARY RIGHTS are included in all the information disclosed herein. This information is submitted in confidence, and neither this document nor the information disclosed herein shall be reproduced or transferred to any other document, nor shall it be used or disclosed to any person for manufacturing or any other reason except as specifically authorized in writing by C P Systems, Inc.

© 2011 C P Systems, Inc.

C P SYSTEMS, INC.

P.O. BOX 780, 20705 E. MARSH STATION RD., VAIL, AZ 85641

SCALE: 1:5	SIZE: D	DRAWING NO.: ASM-100066	REV.: REL-A
SHEET: 2 OF 2			

REV.: REL-A
SIZE: D DRAWING NO.: ASM-100066

MATERIAL:
PER COMPONENT
FINISH:
WEIGHT:
17666.27 gm

REVISIONS				
ZONE	REV.	DESCRIPTION	DATE	APPROVED

NOTES:

1. ALL WELDS IN ACCORDANCE WITH AWS D1.1

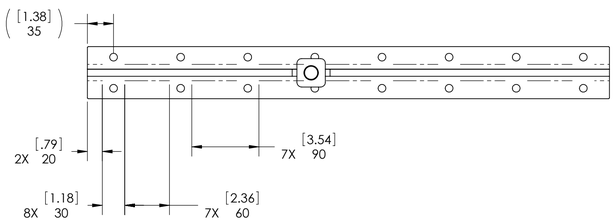

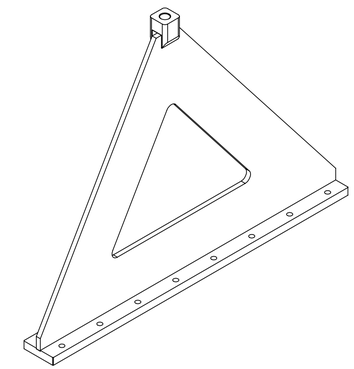

ISOMETRIC VIEW
FOR REFERENCE ONLY
SCALE: NONE

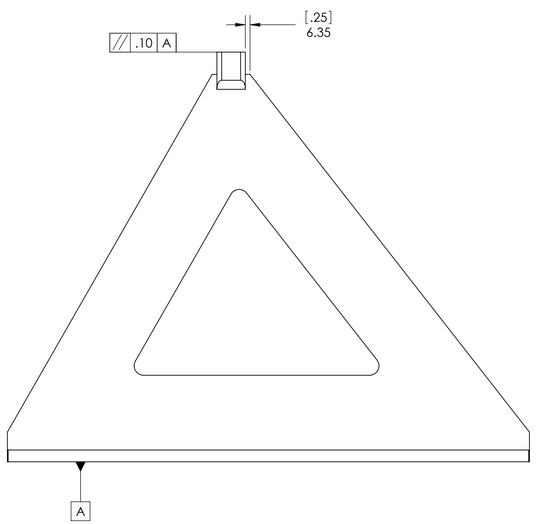

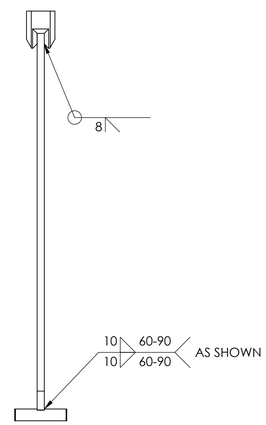

ITEM NO.	PART NUMBER	DESCRIPTION	QTY.
1	PRT-100075	BASE, SPIDER VANE	1
2	PRT-100076	SPIDER VANE	1
3	PRT-100079	SPIDER VANE OUTER BLOCK	1

PROPRIETARY RIGHTS are included in all the information disclosed herein. This information is submitted in confidence, and neither this document nor the information disclosed herein shall be reproduced or transferred to any other document, nor shall it be used or disclosed to any person for manufacturing or any other reason except as specifically authorized in writing by C P Systems, Inc.

© 2011 C P Systems, Inc.

THIRD ANGLE PROJECTION

TRIANGULAR FLAG NOTE DENOTES CHANGE FROM PREVIOUS REVISION LEVEL

DO NOT SCALE DRAWING

INTERPRET DRAWING IN ACCORDANCE WITH ASME Y14.5M-1994

NEXT ASSY	USED ON
ASM-100094	KMTNet

UNLESS OTHERWISE NOTED:

ALL DIMENSIONS ARE IN MILLIMETERS AND ARE AFTER APPLIED FINISHES

TOLERANCES:

.X: ± .25 .XXX: ± .05
.XX: ± .13 ANGLES: ± 0°30'

ALL PARTS TO BE FREE OF BURRS AND SHARP EDGES

DRAWN: R. PRICE	DATE: 02 OCT 2011		
CHECKED:	DATE:		
ENGINEERING:	DATE:		
MANUFACTURING:	DATE:		
APPROVED:	DATE:		

C P SYSTEMS, INC.

P.O. BOX 780, 20705 E. MARSH STATION RD., VAIL, AZ 85641

TITLE:

SPIDER VANE ASSY - WELDMENT

SCALE: 1:5	SIZE: D	DRAWING NO.: ASM-100077	REV.: REL-A
SHEET: 1 OF 1			

REV REL-A

SIZE: D DRAWING NO.: ASM-100077

MATERIAL:
PER COMPONENT
FINISH:
NOTED
WEIGHT:
74003.52 gm

REVISIONS				
ZONE	REV.	DESCRIPTION	DATE	APPROVED

NOTES:

1. CHEMICAL FILM PER MIL-C-5541-E
2. FINISH: PAINT ALL SURFACES EXCEPT THOSE MARKED [M]

   WITH LOW REFLECTION FLAT BLACK COATING. REFER TO CPSI DOCUMENT KMTNet TELESCOPE SURFACE FINISHES. MASK ALL HOLES AND THREADED HOLES.

[3] INSTALL THREADED INSERTS AFTER ALL FINISHES ARE COMPLETE

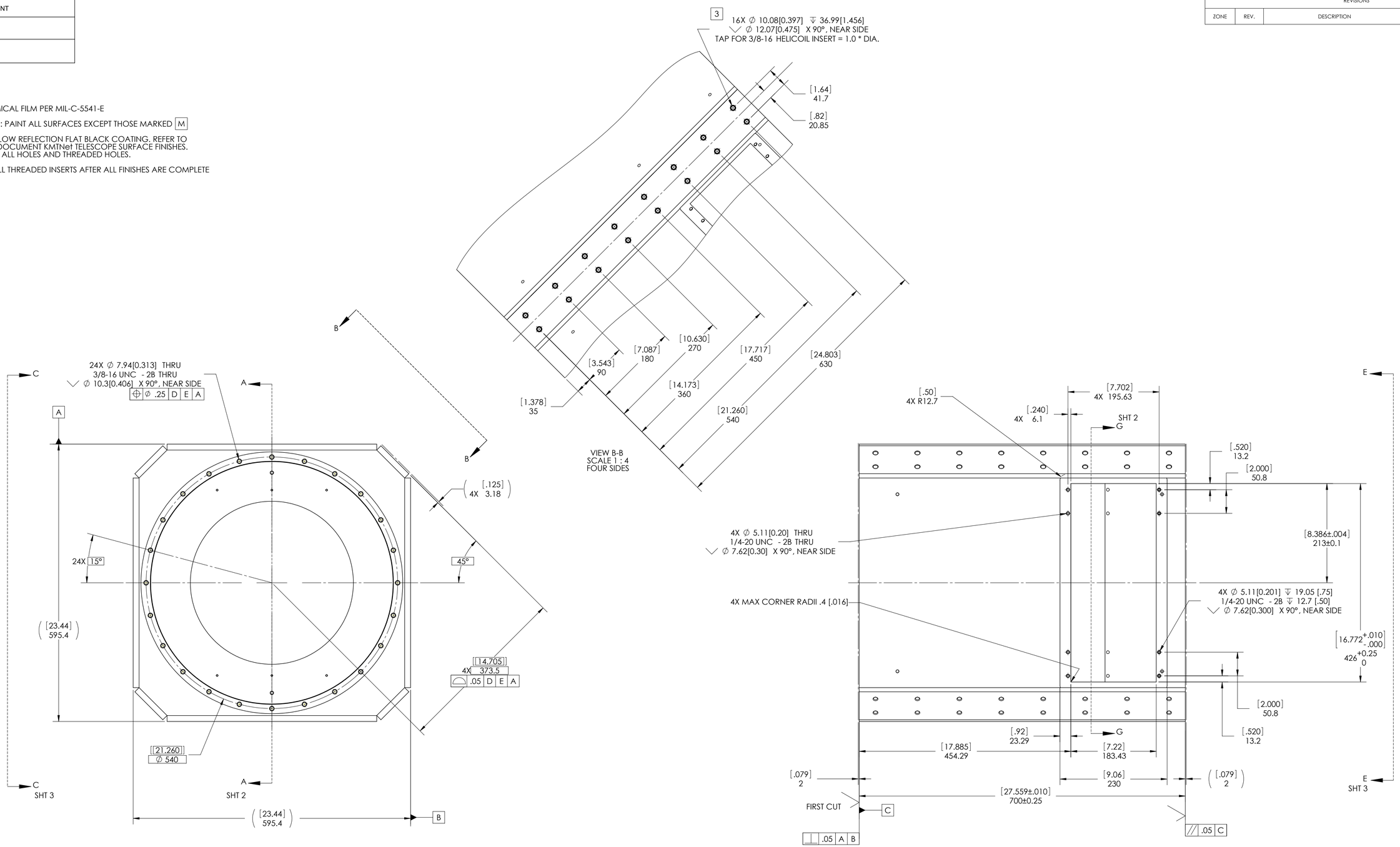

ITEM NO.	PART NUMBER	DESCRIPTION	QTY.
1	ASM-100066	PFC HOUSING - WELDMENT	1

PROPRIETARY RIGHTS are included in all the information disclosed herein. This information is submitted in confidence, and neither this document nor the information disclosed herein shall be reproduced or transferred to any other document, nor shall it be used or disclosed to any person for manufacturing or any other reason except as specifically authorized in writing by C P Systems, Inc.

© 2011 C P Systems, Inc.

THIRD ANGLE PROJECTION

TRIANGULAR FLAG NOTE DENOTES CHANGE FROM PREVIOUS REVISION LEVEL

DO NOT SCALE DRAWING

INTERPRET DRAWING IN ACCORDANCE WITH ASME Y14.5M-1994

NEXT ASSY	USED ON
ASM-100082	KMTNet

UNLESS OTHERWISE NOTED:

ALL DIMENSIONS ARE IN MILLIMETERS AND ARE AFTER APPLIED FINISHES

TOLERANCES:

.X: ± .25 .XXX: ± .05
.XX: ± .13 ANGLES: ± 0°30'

ALL PARTS TO BE FREE OF BURRS AND SHARP EDGES

DRAWN:	R. PRICE	DATE:	30 SEPT 2011
CHECKED:	-	DATE:	-
ENGINEERING:	-	DATE:	-
MANUFACTURING:	-	DATE:	-
APPROVED:	-	DATE:	-

C P SYSTEMS, INC.

P.O. BOX 780, 20705 E. MARSH STATION RD., VAIL, AZ 85641

TITLE:

PFC HOUSING - MACHINING

SCALE:	SIZE:	DRAWING NO.:	REV.:
1:5	D	ASM-100078	REL-A

SHEET: 1 OF 4

REV REL-A

SIZE: D DRAWING NO.: ASM-100078

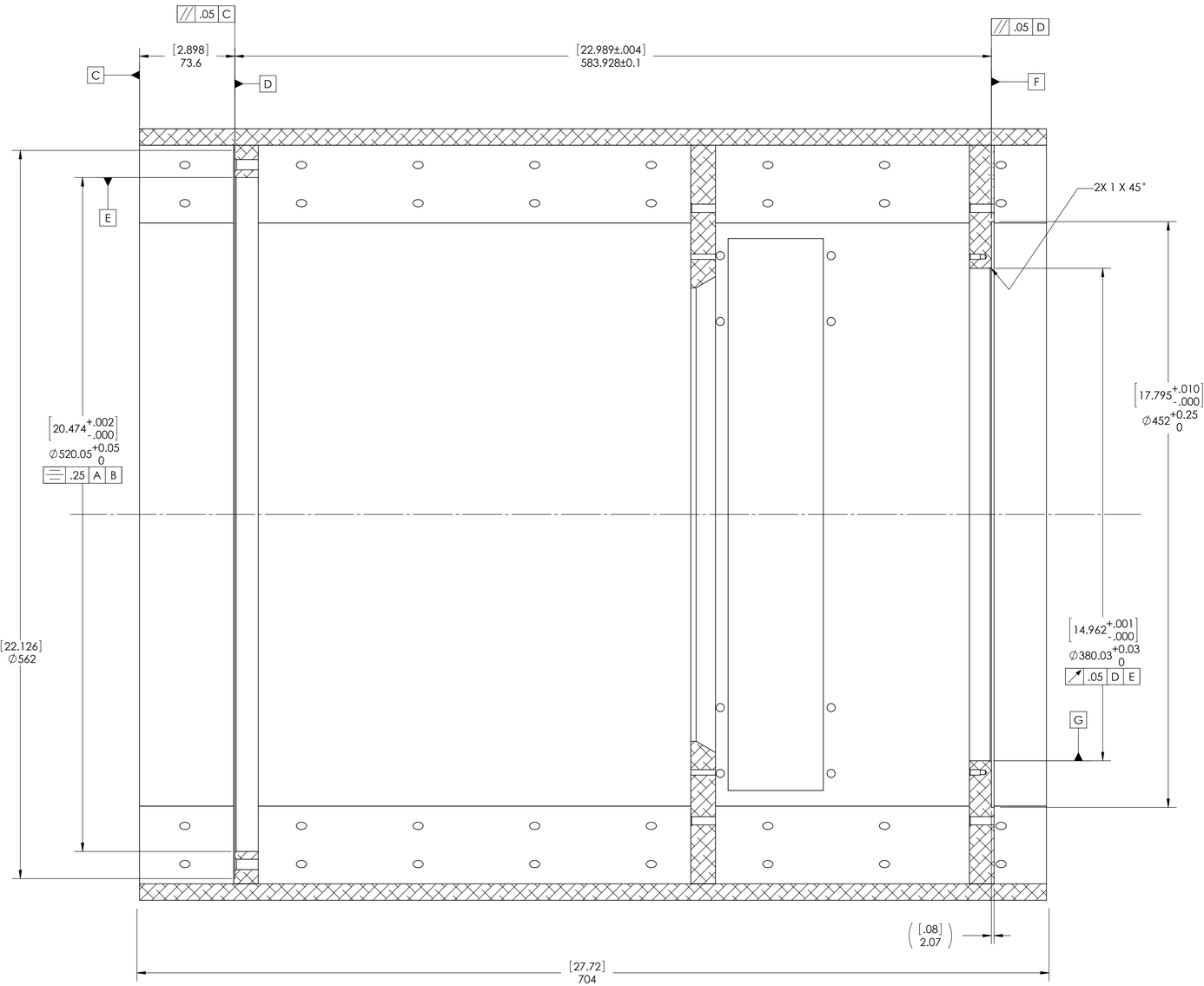

SECTION A-A
SCALE 1 : 2

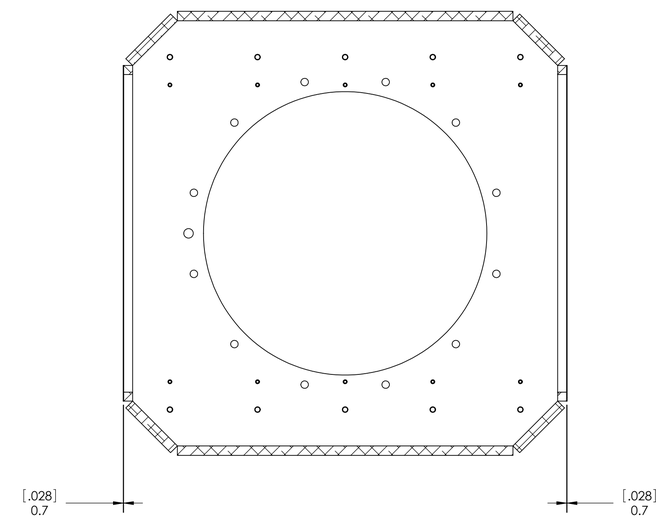

SECTION G-G
SCALE 1 : 4
FROM SHT 1

PROPRIETARY RIGHTS are included in all the information disclosed herein. This information is submitted in confidence, and neither this document nor the information disclosed herein shall be reproduced or transferred to any other document, nor shall it be used or disclosed to any person for manufacturing or any other reason except as specifically authorized in writing by C P Systems, Inc.

© 2011 C P Systems, Inc.

C P SYSTEMS, INC.

P.O. BOX 780, 20705 E. MARSH STATION RD., VAIL, AZ 85641

SCALE: 1:5	SIZE: D	DRAWING NO.: ASM-100078	REV.: REL-A
SHEET: 2 OF 4			

SIZE: D | DRAWING NO.: ASM-100078 | REV.: REL-A

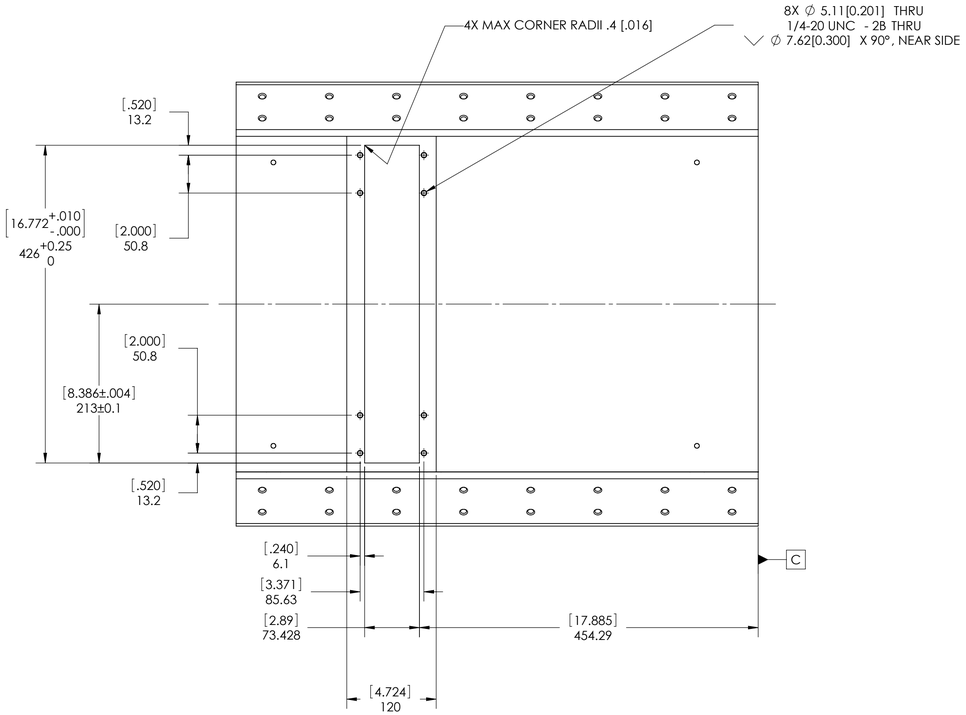

VIEW C-C
SCALE 1 : 4
FROM SHT 1

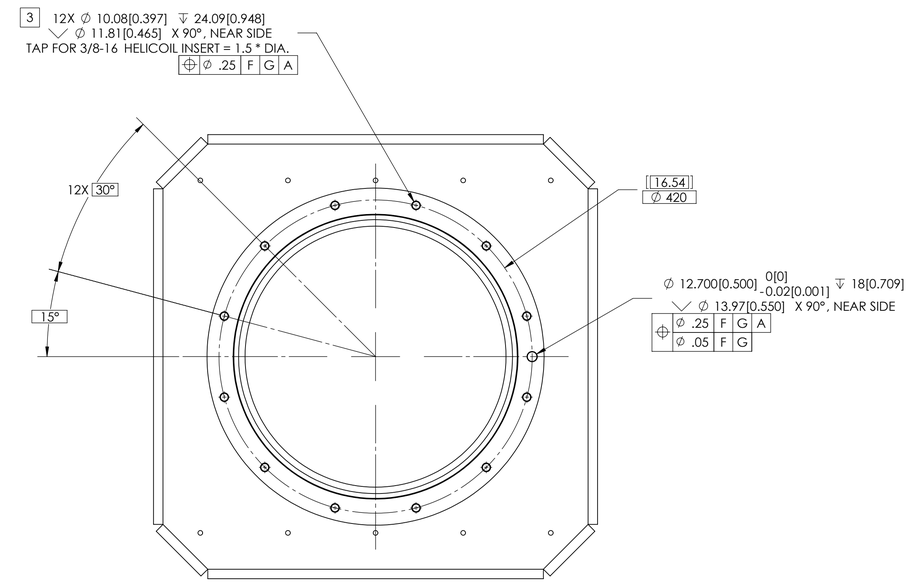

VIEW E-E
SCALE 1 : 4
FROM SHT 1

PROPRIETARY RIGHTS are included in all the information disclosed herein. This information is submitted in confidence, and neither this document nor the information disclosed herein shall be reproduced or transferred to any other document, nor shall it be used or disclosed to any person for manufacturing or any other reason except as specifically authorized in writing by C P Systems, Inc.

© 2011 C P Systems, Inc.

C P SYSTEMS, INC.

P.O. BOX 780, 20705 E. MARSH STATION RD., VAIL, AZ 85641

SCALE: 1:5	SIZE: D	DRAWING NO.: ASM-100078	REV.: REL-A
SHEET: 3 OF 4			

REV.: REL-A
SIZE: D DRAWING NO.: ASM-100078

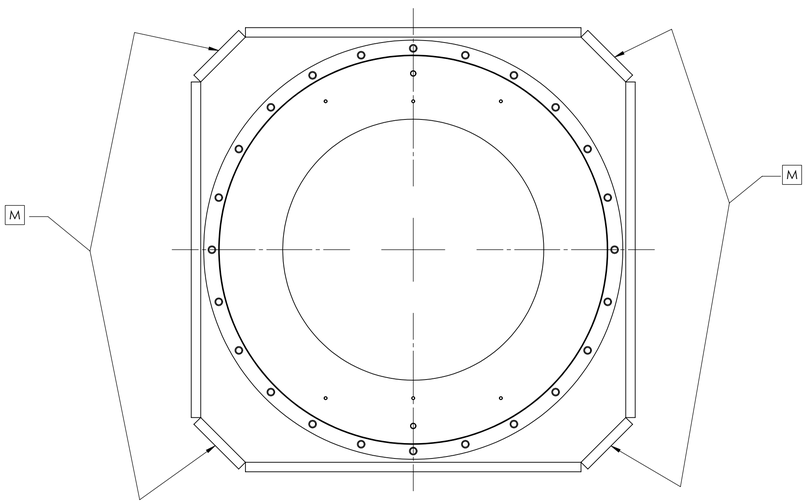

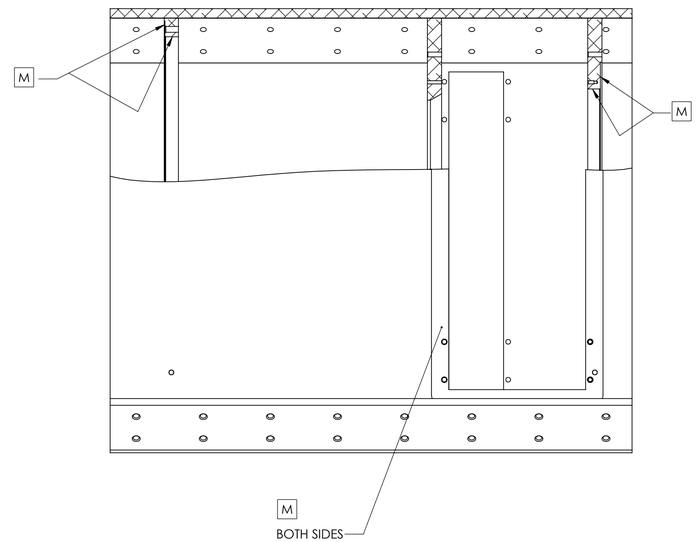

PAINTING DETAIL

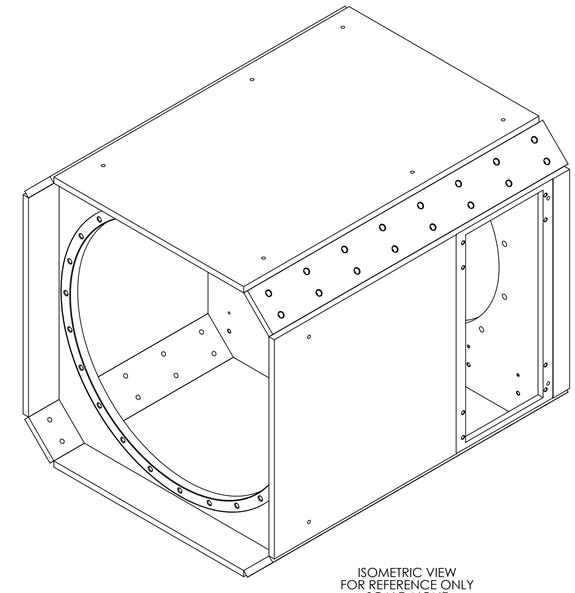

ISOMETRIC VIEW
FOR REFERENCE ONLY
SCALE: NONE

PROPRIETARY RIGHTS are included in all the information disclosed herein. This information is submitted in confidence, and neither this document nor the information disclosed herein shall be reproduced or transferred to any other document, nor shall it be used or disclosed to any person for manufacturing or any other reason except as specifically authorized in writing by C P Systems, Inc.

© 2011 C P Systems, Inc.

C P SYSTEMS, INC.

P.O. BOX 780, 20705 E. MARSH STATION RD., VAIL, AZ 85641

SCALE: 1:5	SIZE: D	DRAWING NO.: ASM-100078	REV.: REL-A
SHEET: 4 OF 4			

SIZE: D DRAWING NO.: ASM-100078 REV.: REL-A

MATERIAL:
PER COMPONENT
FINISH:
-
WEIGHT:
77324.13 gm

REVISIONS				
ZONE	REV.	DESCRIPTION	DATE	APPROVED

NOTES:

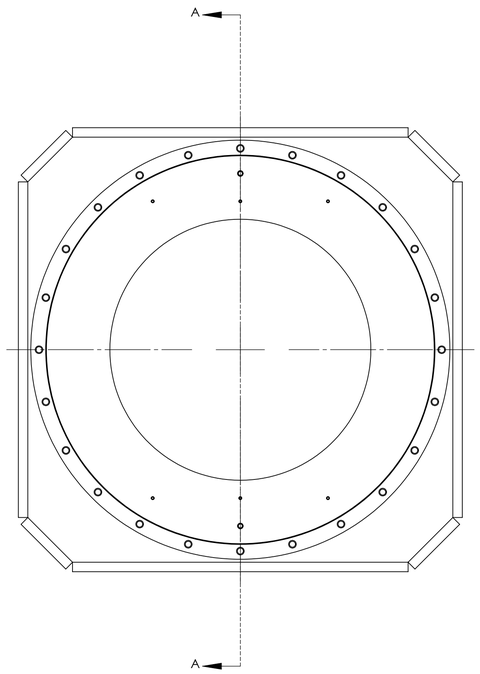

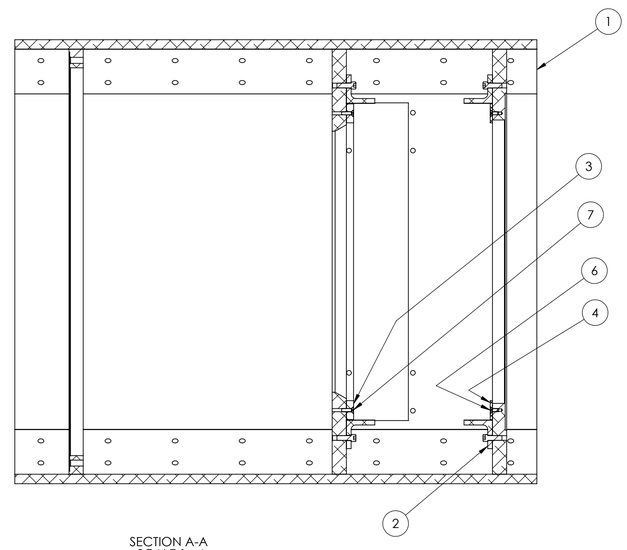

SECTION A-A
SCALE 1 : 4

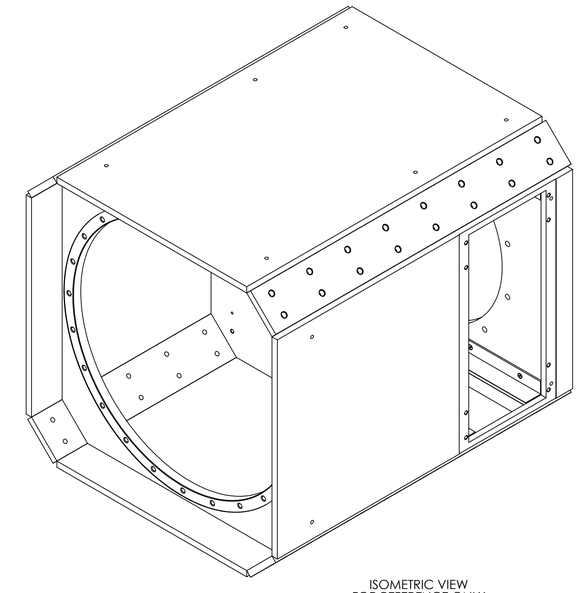

ISOMETRIC VIEW
FOR REFERENCE ONLY
SCALE: NONE

ITEM NO.	PART NUMBER	DESCRIPTION	QTY.
1	ASM-100078	PFC HOUSING - MACHINING	1
2	ASM-100090	SUPPORT RAIL ASSEMBLY	4
3	PRT-100091-1	GUIDE STRIP	2
4	PRT-100091-2	GUIDE STRIP	2
5	.250-20 SHCS	.250-20 X .75" LG SS SHCS	20
6	.164-32 CSCS	.164-32 X .375 LG CSK HEAD SOCKET CAP SCREW	10
7	.164-32 CSCS	.164-32 X .625 LG CSK HEAD SOCKET CAP SCREW	10

PROPRIETARY RIGHTS are included in all the information disclosed herein. This information is submitted in confidence, and neither this document nor the information disclosed herein shall be reproduced or transferred to any other document, nor shall it be used or disclosed to any person for manufacturing or any other reason except as specifically authorized in writing by C P Systems, Inc.

© 2011 C P Systems, Inc.

THIRD ANGLE PROJECTION

TRIANGULAR FLAG NOTE DENOTES CHANGE FROM PREVIOUS REVISION LEVEL

DO NOT SCALE DRAWING

INTERPRET DRAWING IN ACCORDANCE WITH ASME Y14.5M-1994

NEXT ASSY	USED ON
ASM-1000XX	KMTNet

UNLESS OTHERWISE NOTED:

ALL DIMENSIONS ARE IN MILLIMETERS AND ARE AFTER APPLIED FINISHES

TOLERANCES:

.X: ± .25 .XXX: ± .05
.XX: ± .13 ANGLES: ± 0°30'

ALL PARTS TO BE FREE OF BURRS AND SHARP EDGES

DRAWN: R. PRICE	DATE: 30 SEPT 2011		
CHECKED: -	DATE: -		
ENGINEERING: -	DATE: -		
MANUFACTURING: -	DATE: -		
APPROVED: -	DATE: -		

C P SYSTEMS, INC.

P.O. BOX 780, 20705 E. MARSH STATION RD., VAIL, AZ 85641

TITLE:

PFC HOUSING TOP ASSEMBLY

SCALE: 1:5	SIZE: D	DRAWING NO.: ASM-100082	REV.: REL-A
SHEET: 1 OF 1			

REV REL-A
SIZE: D DRAWING NO.: ASM-100082

MATERIAL:
PER COMPONENT
FINISH:
-
WEIGHT:
687.16 gm

REVISIONS				
ZONE	REV.	DESCRIPTION	DATE	APPROVED

NOTES:

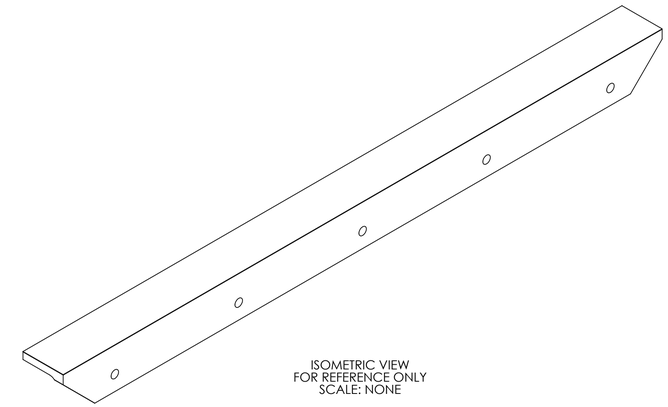

ISOMETRIC VIEW
FOR REFERENCE ONLY
SCALE: NONE

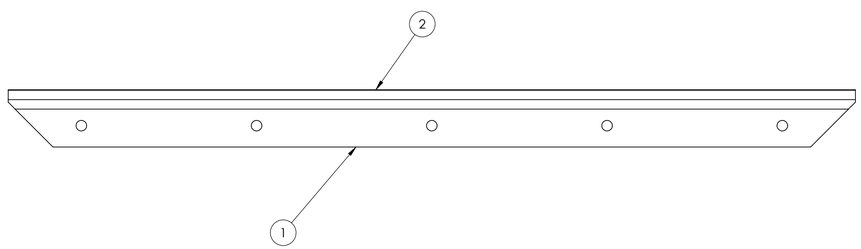

ITEM NO.	PART NUMBER	DESCRIPTION	QTY.
1	PRT-100081	FILTER/SHUTTER SUPPORT RAIL	1
2	PRT-100089	SUPPORT RAIL WEAR STRIP	1

PROPRIETARY RIGHTS are included in all the information disclosed herein. This information is submitted in confidence, and neither this document nor the information disclosed herein shall be reproduced or transferred to any other document, nor shall it be used or disclosed to any person for manufacturing or any other reason except as specifically authorized in writing by C P Systems, Inc.

© 2011 C P Systems, Inc.

THIRD ANGLE PROJECTION

TRIANGULAR FLAG NOTE DENOTES CHANGE FROM PREVIOUS REVISION LEVEL

DO NOT SCALE DRAWING

INTERPRET DRAWING IN ACCORDANCE WITH ASME Y14.5M-1994

NEXT ASSY	USED ON
ASM-100082	KMTNet

UNLESS OTHERWISE NOTED:

ALL DIMENSIONS ARE IN MILLIMETERS AND ARE AFTER APPLIED FINISHES

TOLERANCES:

.X: ± .25 .XXX: ± .05
.XX: ± .13 ANGLES: ± 0°30'

ALL PARTS TO BE FREE OF BURRS AND SHARP EDGES

DRAWN: R. PRICE	DATE: 30 SEPT 2011		
CHECKED: -	DATE: -		
ENGINEERING: -	DATE: -		
MANUFACTURING: -	DATE: -		
APPROVED: -	DATE: -		

C P SYSTEMS, INC.

P.O. BOX 780, 20705 E. MARSH STATION RD., VAIL, AZ 85641

TITLE:

SUPPORT RAIL ASSEMBLY

SCALE: 1:2	SIZE: D	DRAWING NO.: ASM-100090	REV.: REL-A
SHEET: 1 OF 1			

REV REL-A
SIZE D DRAWING NO.: ASM-100090

MATERIAL:
PER COMPONENT
FINISH:
-
WEIGHT:
16481.02 gm

REVISIONS				
ZONE	REV.	DESCRIPTION	DATE	APPROVED

NOTES:

1. FINISH: PAINT ALL SURFACES EXCEPT THOSE MARKED M

   WITH LOW REFLECTION FLAT BLACK COATING. REFER TO DOCUMENT CPSI KMTNet TELESCOPE SURFACE FINISHES. MASK ALL THREADED HOLES.

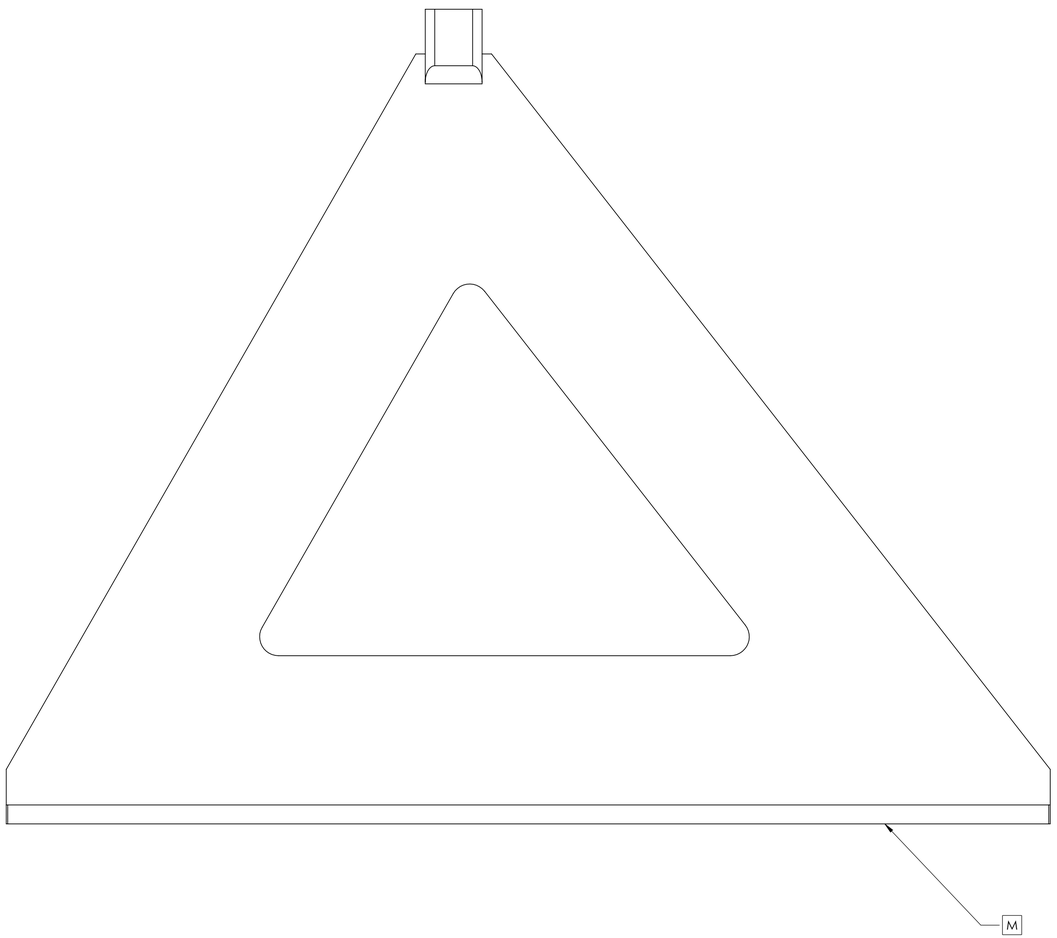

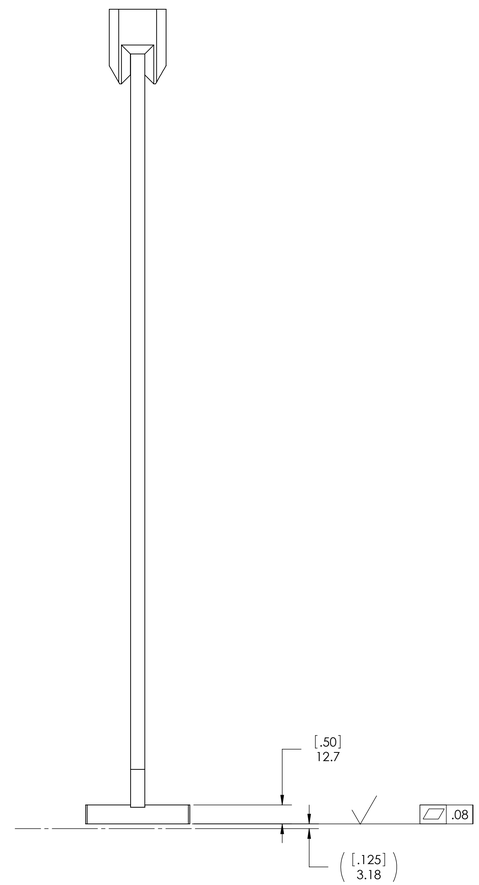

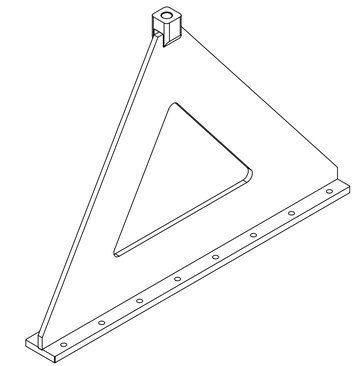

ISOMETRIC VIEW
FOR REFERENCE ONLY
SCALE: NONE

ITEM NO.	PART NUMBER	DESCRIPTION	QTY.
1	ASM-100077	SPIDER VANE ASSY - WELDMENT	1

PROPRIETARY RIGHTS are included in all the information disclosed herein. This information is submitted in confidence, and neither this document nor the information disclosed herein shall be reproduced or transferred to any other document, nor shall it be used or disclosed to any person for manufacturing or any other reason except as specifically authorized in writing by C P Systems, Inc.

© 2011 C P Systems, Inc.

THIRD ANGLE PROJECTION

TRIANGULAR FLAG NOTE DENOTES CHANGE FROM PREVIOUS REVISION LEVEL

DO NOT SCALE DRAWING

INTERPRET DRAWING IN ACCORDANCE WITH ASME Y14.5M-1994

NEXT ASSY	USED ON
ASM-100146	KMTNet

UNLESS OTHERWISE NOTED:

ALL DIMENSIONS ARE IN MILLIMETERS AND ARE AFTER APPLIED FINISHES

TOLERANCES:

.X: ± .25 .XXX: ± .05
.XX: ± .13 ANGLES: ± 0°30'

ALL PARTS TO BE FREE OF BURRS AND SHARP EDGES

DRAWN: R. PRICE	DATE: 27 SEPT 2011		
CHECKED: -	DATE: -		
ENGINEERING: -	DATE: -		
MANUFACTURING: -	DATE: -		
APPROVED: -	DATE: -		

C P SYSTEMS, INC.

P.O. BOX 780, 20705 E. MARSH STATION RD., VAIL, AZ 85641

TITLE:

SPIDER VANE ASSY - MACHINING

SCALE: 1:5	SIZE: D	DRAWING NO.: ASM-100094	REV.: REL-A
SHEET: 1 OF 1			

REV REL-A

SIZE: D DRAWING NO.: ASM-100094

MATERIAL:
PER COMPONENT
FINISH:
-
WEIGHT:
33029.60 gm

REVISIONS				
ZONE	REV.	DESCRIPTION	DATE	APPROVED

NOTES:

1. AFTER CENTERING OF ITEM 1, INJECT ITEM 4 INTO SPACE BETWEEN ITEM 1 AND ITEM 2 THROUGH 12 HOLES AS SHOWN. NOMINAL BOND GAP 7.5 mm.
2. THREE THREADED HOLES PROVIDED FOR LIFTING EYEBOLTS

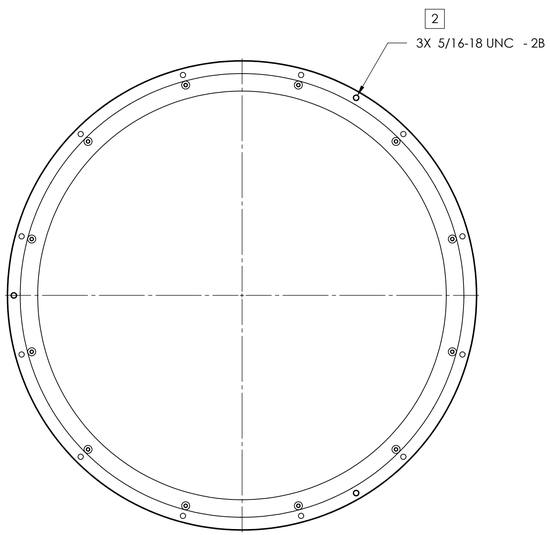

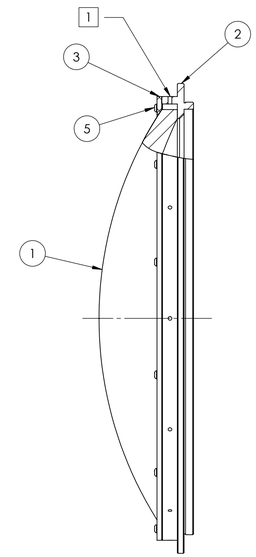

ITEM NO.	PART NUMBER	DESCRIPTION	QTY.
1	PRT-100061	LENS NO. 1, PRIME FOCUS CORRECTOR	1
2	PRT-100085	LENS NO. 1 CELL	1
3	PRT-100086	LENS NO. 1 RETAINER	1
4	RTV 560	GE RTV 560 SILICONE COMPOUND	1
5	.250-20 BHCS	.250-20 X .75" LG SS BHCS	12

PROPRIETARY RIGHTS are included in all the information disclosed herein. This information is submitted in confidence, and neither this document nor the information disclosed herein shall be reproduced or transferred to any other document, nor shall it be used or disclosed to any person for manufacturing or any other reason except as specifically authorized in writing by C P Systems, Inc.

© 2011 C P Systems, Inc.

THIRD ANGLE PROJECTION

TRIANGULAR FLAG NOTE DENOTES CHANGE FROM PREVIOUS REVISION LEVEL

DO NOT SCALE DRAWING

INTERPRET DRAWING IN ACCORDANCE WITH ASME Y14.5M-1994

NEXT ASSY	USED ON
ASM-100060	KMTNet

UNLESS OTHERWISE NOTED:

ALL DIMENSIONS ARE IN MILLIMETERS AND ARE AFTER APPLIED FINISHES

TOLERANCES:

.X: ± .25 .XXX: ± .05
.XX: ± .13 ANGLES: ± 0°30'

ALL PARTS TO BE FREE OF BURRS AND SHARP EDGES

DRAWN: R. PRICE	DATE: 08 OCT 2011		
CHECKED: -	DATE: -		
ENGINEERING: -	DATE: -		
MANUFACTURING: -	DATE: -		
APPROVED: -	DATE: -		

C P SYSTEMS, INC.

P.O. BOX 780, 20705 E. MARSH STATION RD., VAIL, AZ 85641

TITLE:

LENS NO. 1 ASSEMBLY

SCALE: 1:5	SIZE: D	DRAWING NO.: ASM-100095	REV.: REL-A
SHEET: 1 OF 1			

REV REL-A
SIZE D DRAWING NO.: ASM-100095

MATERIAL:
PER COMPONENT
FINISH:
-
WEIGHT:
31653.60 gm

REVISIONS				
ZONE	REV.	DESCRIPTION	DATE	APPROVED

NOTES:

1. AFTER CENTERING OF ITEM 1, INJECT ITEM 5 INTO SPACE BETWEEN ITEM 1 AND ITEM 2 THROUGH 12 HOLES AS SHOWN. NOMINAL GAP IS 7.5 mm.
2. THREE THREADED HOLES PROVIDED FOR LIFTING EYEBOLTS / JACKING SCREWS AS REQUIRED

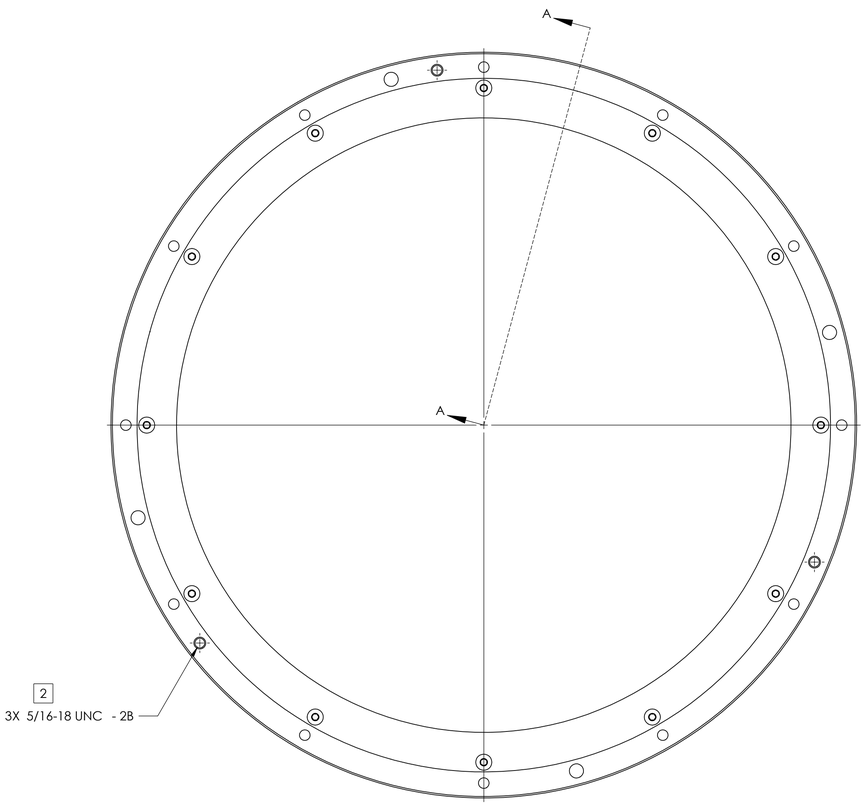

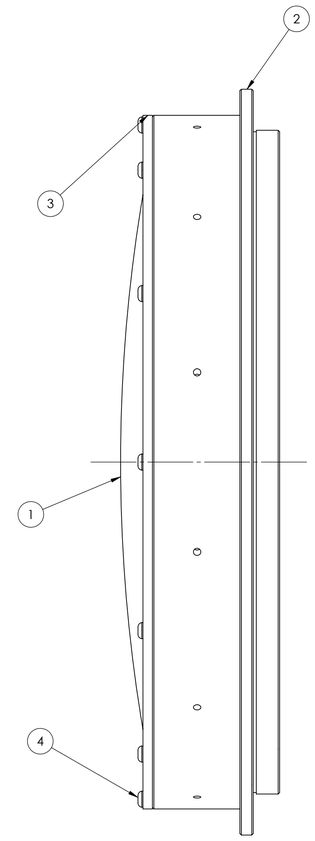

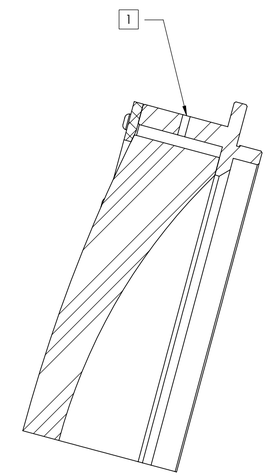

SECTION A-A
SCALE 1 : 2

ITEM NO.	PART NUMBER	DESCRIPTION	QTY.
1	PRT-100062	LENS NO. 2, PRIME FOCUS CORRECTOR	1
2	PRT-100084	LENS NO. 2 CELL	1
3	PRT-100087	LENS NO. 2 RETAINER	1
4	.250-20 BHCS	.250-20 X .75" LG SS BHCS	12
5	RTV 560	GE RTV 560 SILICONE COMPOUND	1

PROPRIETARY RIGHTS are included in all the information disclosed herein. This information is submitted in confidence, and neither this document nor the information disclosed herein shall be reproduced or transferred to any other document, nor shall it be used or disclosed to any person for manufacturing or any other reason except as specifically authorized in writing by C P Systems, Inc.

© 2011 C P Systems, Inc.

THIRD ANGLE PROJECTION

TRIANGULAR FLAG NOTE DENOTES CHANGE FROM PREVIOUS REVISION LEVEL

DO NOT SCALE DRAWING

INTERPRET DRAWING IN ACCORDANCE WITH ASME Y14.5M-1994

NEXT ASSY	USED ON
ASM-100060	KMTNet

UNLESS OTHERWISE NOTED:

ALL DIMENSIONS ARE IN MILLIMETERS AND ARE AFTER APPLIED FINISHES

TOLERANCES:

.X: ± .25 .XXX: ± .05
.XX: ± .13 ANGLES: ± 0°30'

ALL PARTS TO BE FREE OF BURRS AND SHARP EDGES

DRAWN: R. PRICE	DATE: 08 OCT 2011		
CHECKED: -	DATE: -		
ENGINEERING: -	DATE: -		
MANUFACTURING: -	DATE: -		
APPROVED: -	DATE: -		

C P SYSTEMS, INC.
P.O. BOX 780, 20705 E. MARSH STATION RD., VAIL, AZ 85641

TITLE:

LENS NO. 2 ASSEMBLY

SCALE: 1:5	SIZE: D	DRAWING NO.: ASM-100096	REV.: REL-A
SHEET: 1 OF 1			

REV REL-A
SIZE D DRAWING NO: ASM-100096

MATERIAL:
PER COMPONENT
FINISH:
-
WEIGHT:
19095.63 gm

REVISIONS				
ZONE	REV.	DESCRIPTION	DATE	APPROVED

NOTES:

1. AFTER CENTERING OF ITEM 1, INJECT ITEM 4 INTO SPACE BETWEEN ITEM 1 AND ITEM 2 THROUGH 12 HOLES AS SHOWN. NOMINAL GAP IS 7.5 mm.
2. THREE THREADED HOLES PROVIDED FOR LIFTING EYEBOLTS.

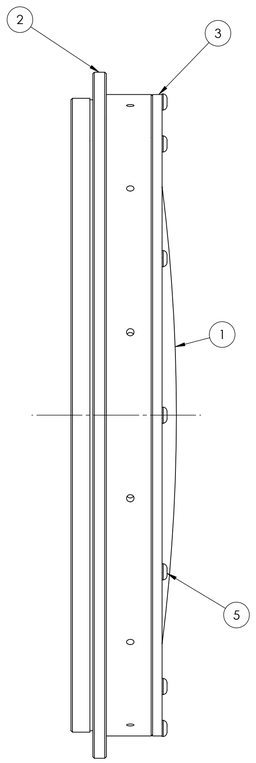

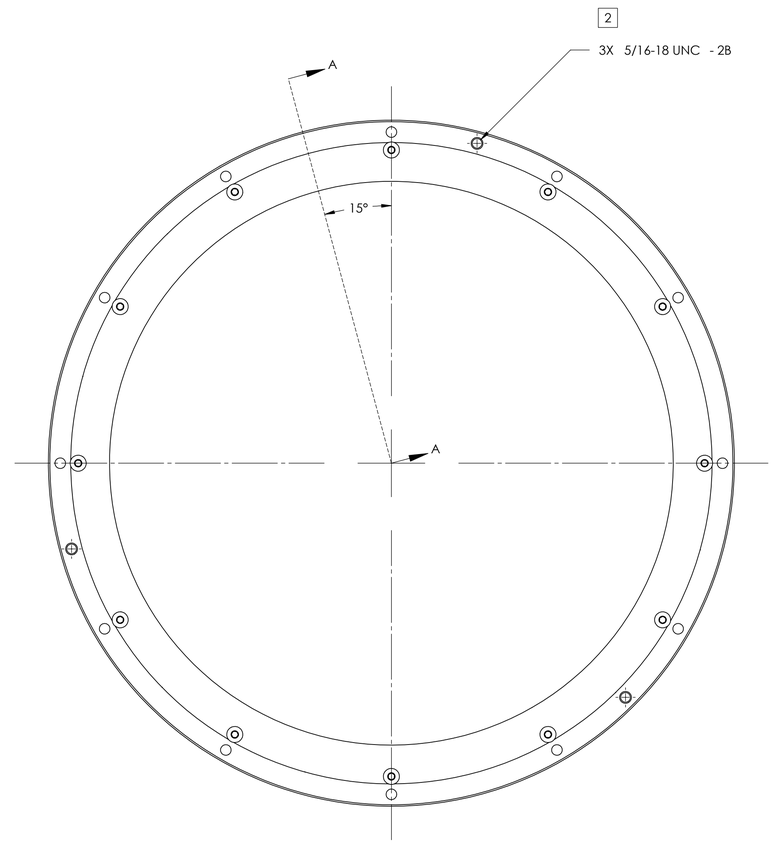

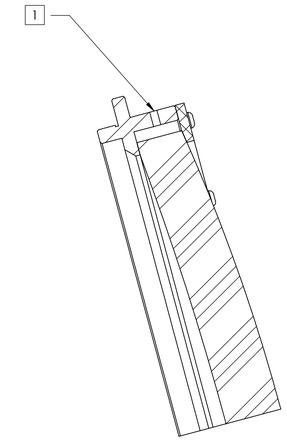

SECTION A-A
SCALE 1 : 2

ITEM NO.	PART NUMBER	DESCRIPTION	QTY.
1	PRT-100063	LENS NO. 3, PRIME FOCUS CORRECTOR	1
2	PRT-100074	LENS NO. 3 CELL	1
3	PRT-100088	LENS NO. 3 RETAINER	1
4	RTV 560	GE RTV 560 SILICONE COMPOUND	1
5	.250-20 BHCS	.250-20 X .75" LG SS BHCS	12

PROPRIETARY RIGHTS are included in all the information disclosed herein. This information is submitted in confidence, and neither this document nor the information disclosed herein shall be reproduced or transferred to any other document, nor shall it be used or disclosed to any person for manufacturing or any other reason except as specifically authorized in writing by C P Systems, Inc.

© 2011 C P Systems, Inc.

THIRD ANGLE PROJECTION

TRIANGULAR FLAG NOTE DENOTES CHANGE FROM PREVIOUS REVISION LEVEL

DO NOT SCALE DRAWING

INTERPRET DRAWING IN ACCORDANCE WITH ASME Y14.5M-1994

NEXT ASSY	USED ON
ASM-100060	KMTNet

UNLESS OTHERWISE NOTED:

ALL DIMENSIONS ARE IN MILLIMETERS AND ARE AFTER APPLIED FINISHES

TOLERANCES:

.X: ± .25 .XXX: ± .05
.XX: ± .13 ANGLES: ± 0°30'

ALL PARTS TO BE FREE OF BURRS AND SHARP EDGES

DRAWN: R. PRICE	DATE: 08 OCT 2011		
CHECKED: -	DATE: -		
ENGINEERING: -	DATE: -		
MANUFACTURING: -	DATE: -		
APPROVED: -	DATE: -		

C P SYSTEMS, INC.
P.O. BOX 780, 20705 E. MARSH STATION RD., VAIL, AZ 85641

TITLE:

LENS NO. 3 ASSEMBLY

SCALE: 1:5	SIZE: D	DRAWING NO.: ASM-100109	REV.: REL-A
SHEET: 1 OF 1			

SIZE: D DRAWING NO.: ASM-100109 REV: REL-A

MATERIAL:
PER COMPONENT
FINISH:
-
WEIGHT:
53293.15 gm

REVISIONS				
ZONE	REV.	DESCRIPTION	DATE	APPROVED

NOTES:

1. ENSURE THAT THE HEAD OF ITEM 3 IS A MINIMUM OF .2 mm OR MORE BELOW THE SURFACE OF ITEM 1

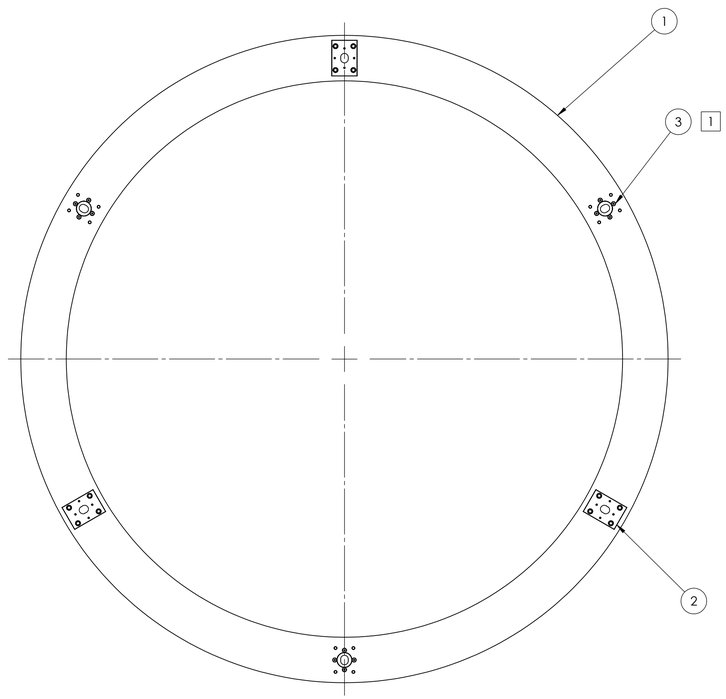

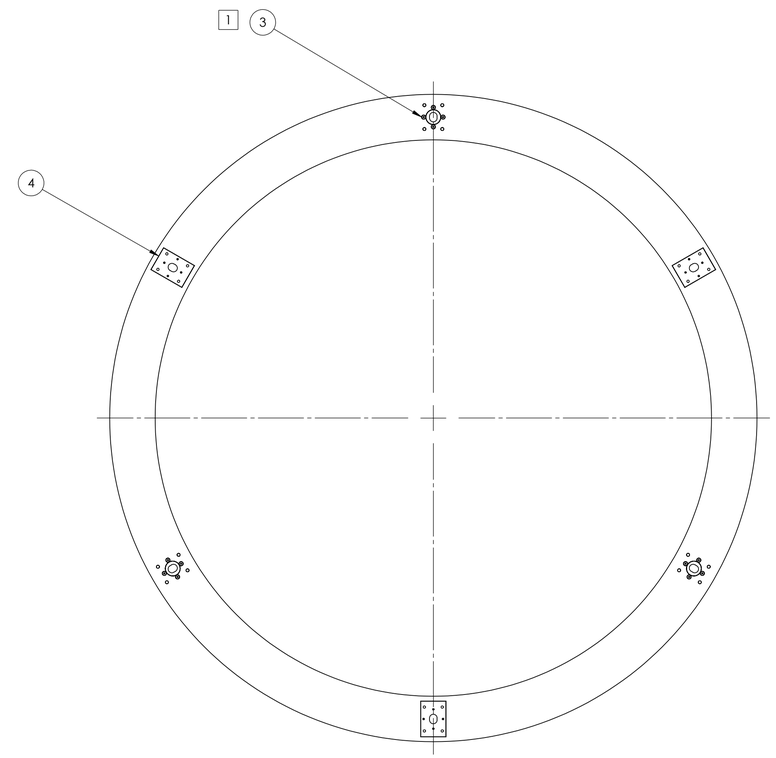

ITEM NO.	PART NUMBER	DESCRIPTION	QTY.
1	PRT-100134	RING FLEXURE	1
2	PRT-100138	RING FLEXURE ALIGNMENT BUSHING	3
3	.250-20 CSCS	.250-20 X .50 LG CSK HEAD SOCKET CAP SCREW	24
4	PRT-100139	HEAD RING ALIGNMENT BUSHING	3

PROPRIETARY RIGHTS are included in all the information disclosed herein. This information is submitted in confidence, and neither this document nor the information disclosed herein shall be reproduced or transferred to any other document, nor shall it be used or disclosed to any person for manufacturing or any other reason except as specifically authorized in writing by C P Systems, Inc.

© 2011 C P Systems, Inc.

THIRD ANGLE PROJECTION

TRIANGULAR FLAG NOTE DENOTES CHANGE FROM PREVIOUS REVISION LEVEL

DO NOT SCALE DRAWING

INTERPRET DRAWING IN ACCORDANCE WITH ASME Y14.5M-1994

NEXT ASSY	USED ON
ASM-100146	KMTNet

UNLESS OTHERWISE NOTED:

ALL DIMENSIONS ARE IN MILLIMETERS AND ARE AFTER APPLIED FINISHES

TOLERANCES:

.X: ± .25 .XXX: ± .05
.XX: ± .13 ANGLES: ± 0°30'

ALL PARTS TO BE FREE OF BURRS AND SHARP EDGES

DRAWN: R. PRICE	DATE: 03 SEPT 2011
CHECKED: -	DATE: -
ENGINEERING: -	DATE: -
MANUFACTURING: -	DATE: -
APPROVED: -	DATE: -

C P SYSTEMS, INC.

P.O. BOX 780, 20705 E. MARSH STATION RD., VAIL, AZ 85641

TITLE:

RING FLEXURE ASSEMBLY

SCALE: 1:10	SIZE: D	DRAWING NO.: ASM-100137	REV.: REL-A
SHEET: 1 OF 1			

SIZE: D DRAWING NO.: ASM-100137 REV REL-A

MATERIAL:
PER COMPONENT

FINISH:
-

WEIGHT:
150166.73 gm

REVISIONS				
ZONE	REV.	DESCRIPTION	DATE	APPROVED

NOTES:

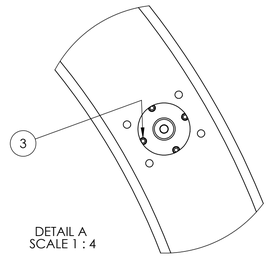

DETAIL A
SCALE 1 : 4

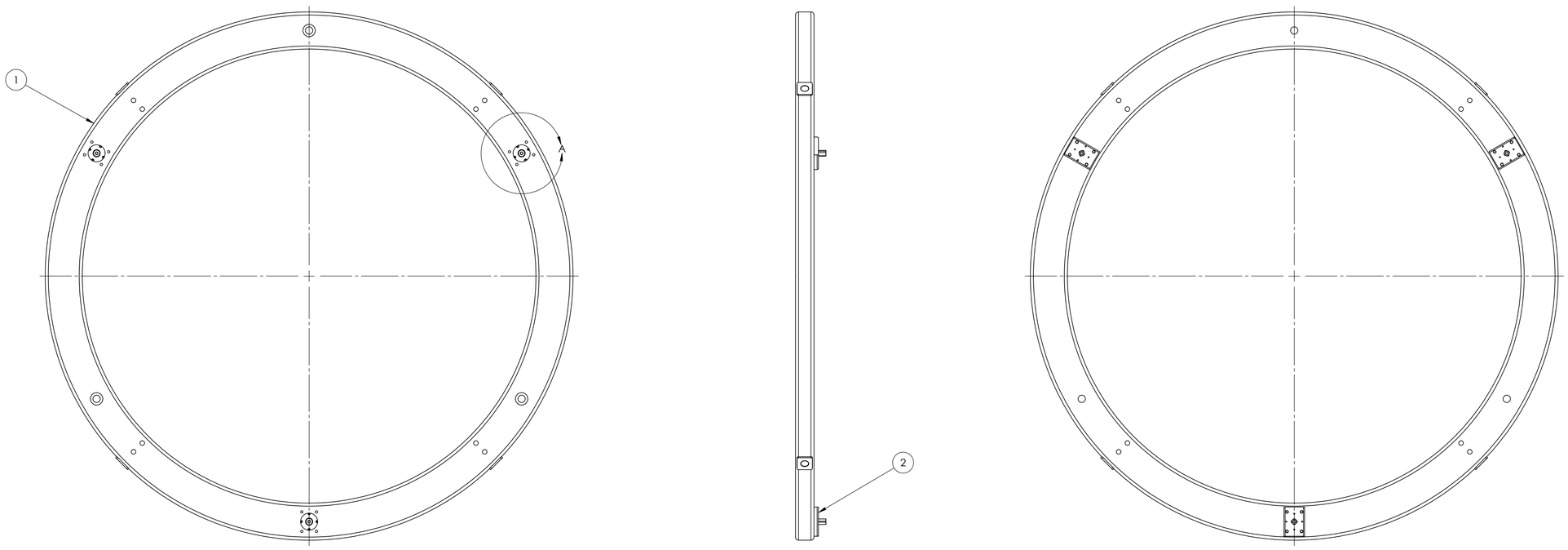

ITEM NO.	PART NUMBER	DESCRIPTION	QTY.
1	ASM-100144	HEAD RING WELDMENT	1
2	PRT-100141	DIAMOND PIN LOCATOR, HEAD RING	3
3	.250-20 SHCS	.250-20 X .75" LG SS SHCS	12

PROPRIETARY RIGHTS are included in all the information disclosed herein. This information is submitted in confidence, and neither this document nor the information disclosed herein shall be reproduced or transferred to any other document, nor shall it be used or disclosed to any person for manufacturing or any other reason except as specifically authorized in writing by C P Systems, Inc.

© 2011 C P Systems, Inc.

THIRD ANGLE PROJECTION

TRIANGULAR FLAG NOTE DENOTES CHANGE FROM PREVIOUS REVISION LEVEL

DO NOT SCALE DRAWING

INTERPRET DRAWING IN ACCORDANCE WITH ASME Y14.5M-1994

NEXT ASSY	USED ON
ASM-100146	KMTNet

UNLESS OTHERWISE NOTED:

ALL DIMENSIONS ARE IN MILLIMETERS AND ARE AFTER APPLIED FINISHES

TOLERANCES:

.X: ± .25 .XXX: ± .05
.XX: ± .13 ANGLES: ± 0°30'

ALL PARTS TO BE FREE OF BURRS AND SHARP EDGES

DRAWN: R. PRICE	DATE: 27 SEPT 2011		
CHECKED: -	DATE: -		
ENGINEERING: -	DATE: -		
MANUFACTURING: -	DATE: -		
APPROVED: -	DATE: -		

C P SYSTEMS, INC.
P.O. BOX 780, 20705 E. MARSH STATION RD., VAIL, AZ 85641

TITLE:
HEAD RING ASSEMBLY

SCALE: 1:10	SIZE: D	DRAWING NO.: ASM-100143	REV.: REL-A
SHEET: 1 OF 1			

SIZE: D DRAWING NO.: ASM-100143 REV REL-A

MATERIAL:
PER COMPONENT
FINISH:
-
WEIGHT:
145577.45 gm

REVISIONS				
ZONE	REV.	DESCRIPTION	DATE	APPROVED

NOTES:

1. ALIGN BORES OF OPPOSING PAIRS OF ITEM 2 PRIOR TO WELDING.

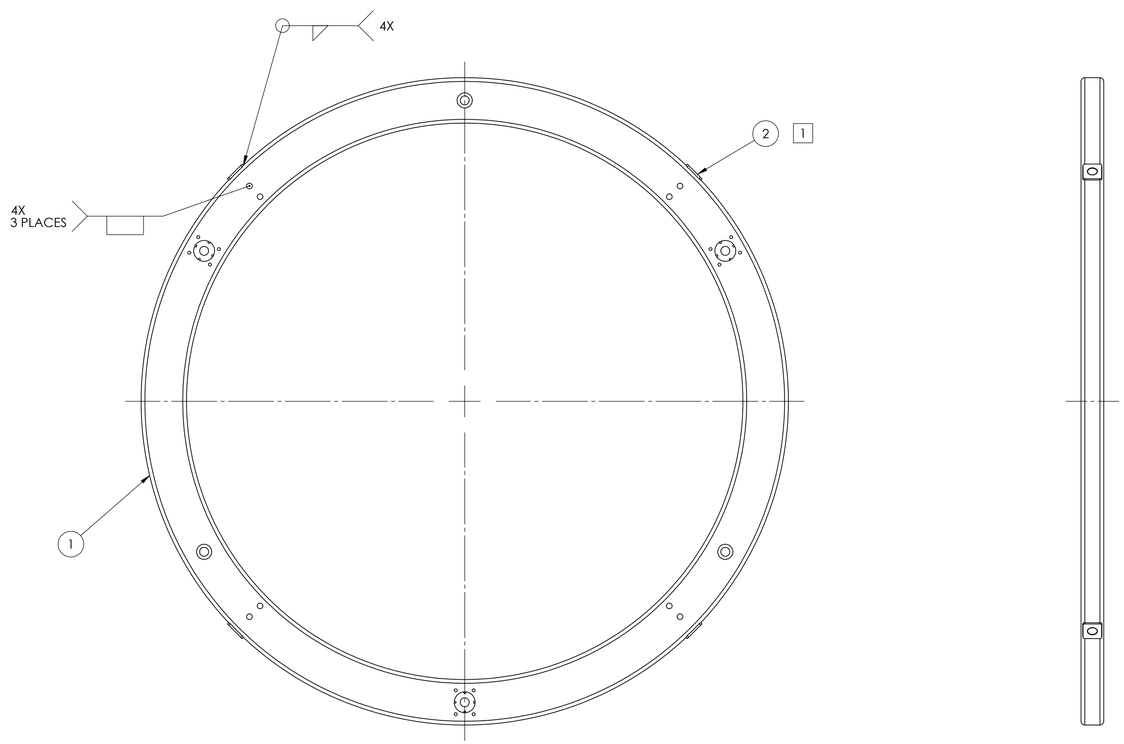

ITEM NO.	PART NUMBER	DESCRIPTION	Default/ QTY.
1	PRT-100140	HEAD RING	1
2	PRT-100142	SPIDER SUPPORT BLOCK	4

PROPRIETARY RIGHTS are included in all the information disclosed herein. This information is submitted in confidence, and neither this document nor the information disclosed herein shall be reproduced or transferred to any other document, nor shall it be used or disclosed to any person for manufacturing or any other reason except as specifically authorized in writing by C P Systems, Inc.

© 2011 C P Systems, Inc.

THIRD ANGLE PROJECTION

TRIANGULAR FLAG NOTE DENOTES CHANGE FROM PREVIOUS REVISION LEVEL

DO NOT SCALE DRAWING

INTERPRET DRAWING IN ACCORDANCE WITH ASME Y14.5M-1994

NEXT ASSY	USED ON
ASM-100143	KMTNet

UNLESS OTHERWISE NOTED:

ALL DIMENSIONS ARE IN MILLIMETERS AND ARE AFTER APPLIED FINISHES

TOLERANCES:

.X: ± .25 .XXX: ± .05
.XX: ± .13 ANGLES: ± 0°30'

ALL PARTS TO BE FREE OF BURRS AND SHARP EDGES

DRAWN: R. PRICE	DATE: 02 OCT 2011		
CHECKED: -	DATE: -		
ENGINEERING: -	DATE: -		
MANUFACTURING: -	DATE: -		
APPROVED: -	DATE: -		

C P SYSTEMS, INC.

P.O. BOX 780, 20705 E. MARSH STATION RD., VAIL, AZ 85641

TITLE:

HEAD RING WELDMENT

SCALE: 1:10	SIZE: D	DRAWING NO.: ASM-100144	REV.: REL-A
SHEET: 1 OF 1			

SIZE: D DRAWING NO.: ASM-100144 REV: REL-A

MATERIAL:
PER COMPONENT

FINISH:
-

WEIGHT:
922391.28 gm

REVISIONS				
ZONE	REV.	DESCRIPTION	DATE	APPROVED

NOTES:

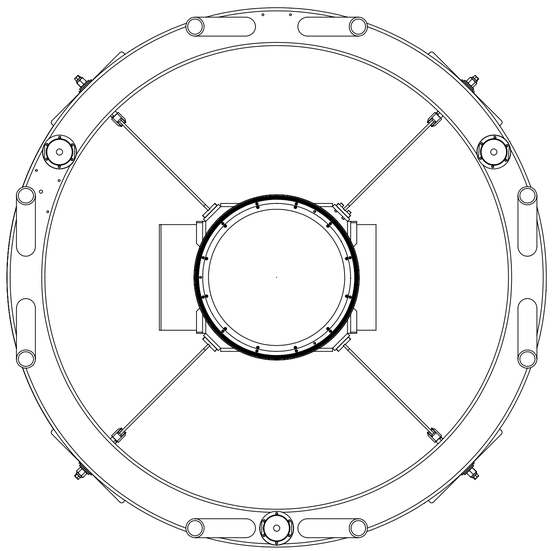

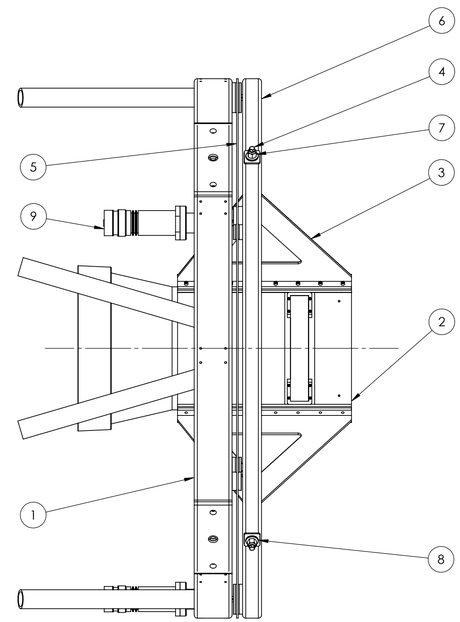

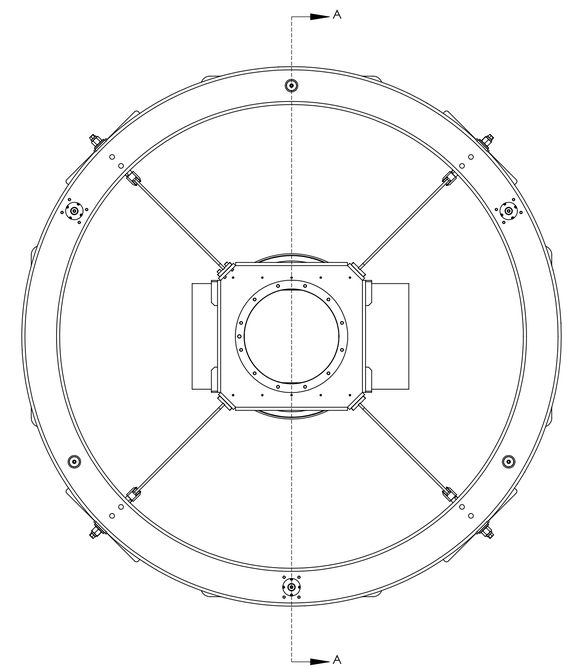

ITEM NO.	PART NUMBER	DESCRIPTION	Default/ QTY.
1	ICD-100136	INTERFACE - TRUSS TOP RING ASSY	1
2	ASM-100060	PRIME FOCUS CORRECTOR ASSEMBLY	1
3	ASM-100094	SPIDER VANE ASSY - MACHINING	4
4	PRT-100080	SPIDER ATTACHMENT SHAFT	4
5	ASM-100137	RING FLEXURE ASSEMBLY	1
6	ASM-100143	HEAD RING ASSEMBLY	1
7	PRT-100110	SPIDER ATTACHMENT NUT	4
8	1.000 WASHER	1.00" SS FLAT WASHER McM 98125A450	4
9	Head Ring Drive Motor		3
10	.375 LARGE WASHER	.375" WASHER 1.625" DIA McM 92140A118	3
11	.375-16 SHCS	.375-16 X 1.25" LG SS SHCS	19
12	PRT-100132	FOCUS MOTOR EXTENSION	3
13	Filter Shutter Assembly		1

PROPRIETARY RIGHTS are included in all the information disclosed herein. This information is submitted in confidence, and neither this document nor the information disclosed herein shall be reproduced or transferred to any other document, nor shall it be used or disclosed to any person for manufacturing or any other reason except as specifically authorized in writing by C P Systems, Inc.

© 2011 C P Systems, Inc.

THIRD ANGLE PROJECTION

TRIANGULAR FLAG NOTE DENOTES CHANGE FROM PREVIOUS REVISION LEVEL

DO NOT SCALE DRAWING

INTERPRET DRAWING IN ACCORDANCE WITH ASME Y14.5M-1994

NEXT ASSY	USED ON
-	KMTNet

UNLESS OTHERWISE NOTED:

ALL DIMENSIONS ARE IN MILLIMETERS AND ARE AFTER APPLIED FINISHES

TOLERANCES:

.X: ± .25 .XXX: ± .05
.XX: ± .13 ANGLES: ± 0°30'

ALL PARTS TO BE FREE OF BURRS AND SHARP EDGES

DRAWN: R. PRICE	DATE: 13 NOV 2011		
CHECKED: -	DATE: -		
ENGINEERING: -	DATE: -		
MANUFACTURING: -	DATE: -		
APPROVED: -	DATE: -		

C P SYSTEMS, INC.

P.O. BOX 780, 20705 E. MARSH STATION RD., VAIL, AZ 85641

TITLE:

TRUSS TOP RING / PRIME FOCUS INSTRUMENT ASSEMBLY

SCALE: 1:20	SIZE: D	DRAWING NO.: ASM-100146	REV.: A-01
SHEET: 1 OF 2			

REV A-01

SIZE: D DRAWING NO.: ASM-100146

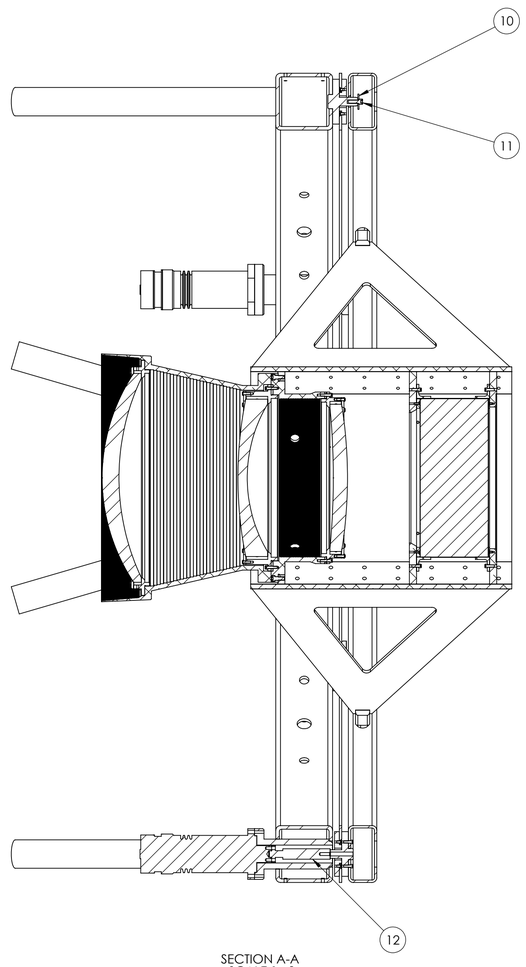

SECTION A-A
SCALE 1 : 8

PROPRIETARY RIGHTS are included in all the information disclosed herein. This information is submitted in confidence, and neither this document nor the information disclosed herein shall be reproduced or transferred to any other document, nor shall it be used or disclosed to any person for manufacturing or any other reason except as specifically authorized in writing by C P Systems, Inc.

© 2011 C P Systems, Inc.

C P SYSTEMS, INC.

P.O. BOX 780, 20705 E. MARSH STATION RD., VAIL, AZ 85641

SCALE:	SIZE:	DRAWING NO.:	REV.:
1:20	D	ASM-100146	A-01
SHEET: 2 OF 2			

REV.: A-01
DRAWING NO.: ASM-100146
SIZE: D

MATERIAL:
ASTM A36 Steel
FINISH:
NOTED
WEIGHT:
349033.11 gm

REVISIONS				
ZONE	REV.	DESCRIPTION	DATE	APPROVED
	A	INITIAL RELEASE	9/3/2011	
	B	ADDED 32 3/8-16 THREADED HOLES	2/19/2012	RSP
	C	ADDED RAISED PADS FOR COUNTERWEIGHT INTERFACE	2/20/2012	RSP
	D	ADDED 12X .375-16 THREADED HOLES AND ONE 0.500 HOLE FOR JIB CRANE MOUNTING BRACKETS	4/20/2012	RSP

NOTES:

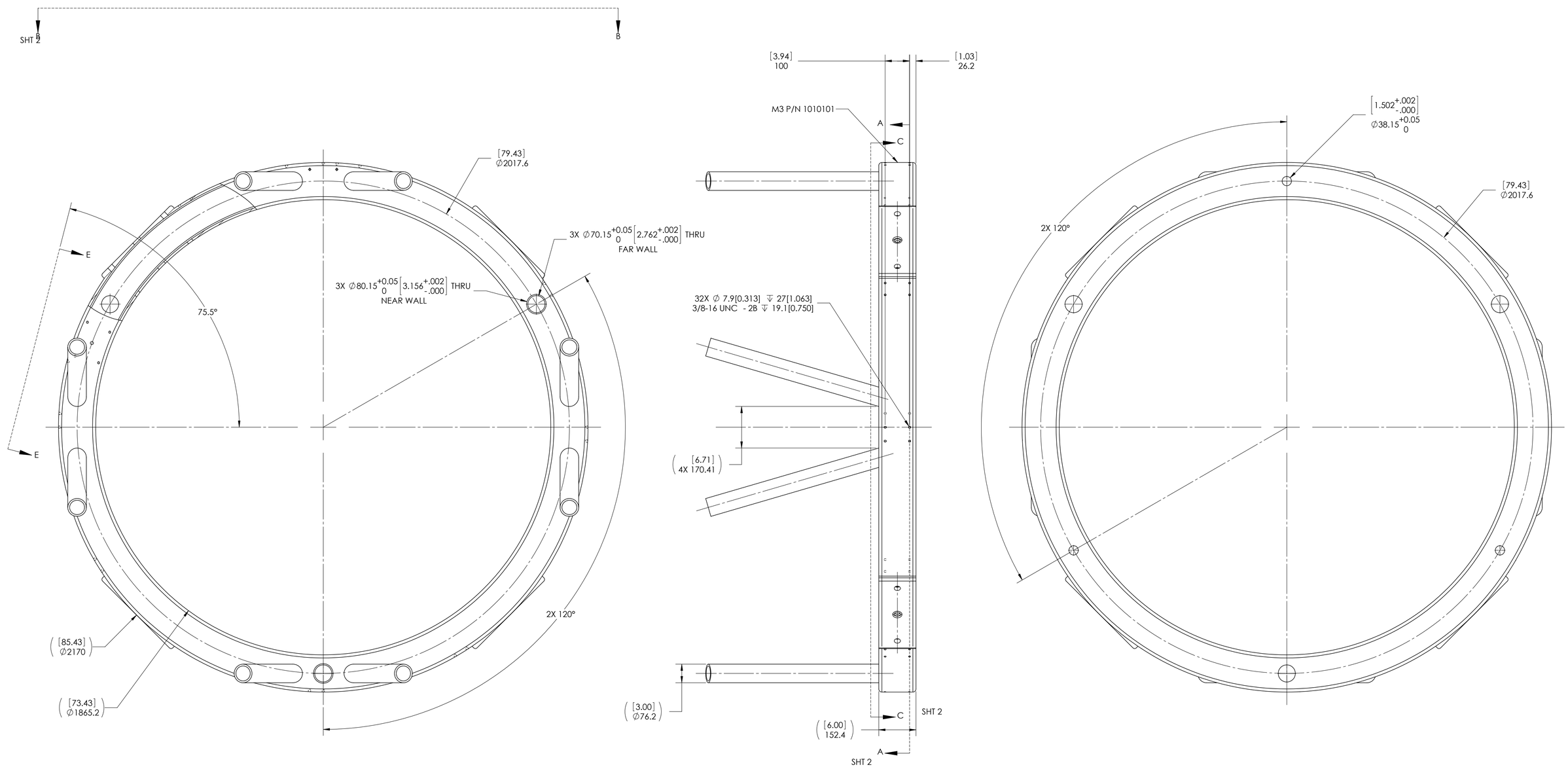

PROPRIETARY RIGHTS are included in all the information disclosed herein. This information is submitted in confidence, and neither this document nor the information disclosed herein shall be reproduced or transferred to any other document, nor shall it be used or disclosed to any person for manufacturing or any other reason except as specifically authorized in writing by C P Systems, Inc.

© 2011 C P Systems, Inc.

THIRD ANGLE PROJECTION

TRIANGULAR FLAG NOTE DENOTES CHANGE FROM PREVIOUS REVISION LEVEL

DO NOT SCALE DRAWING

INTERPRET DRAWING IN ACCORDANCE WITH ASME Y14.5M-1994

REF	KMTNet
NEXT ASSY	USED ON

UNLESS OTHERWISE NOTED:

ALL DIMENSIONS ARE IN MILLIMETERS AND ARE AFTER APPLIED FINISHES

TOLERANCES:

.X: ± .25 .XXX: ± .05
.XX: ± .13 ANGLES: ± 0°30'

ALL PARTS TO BE FREE OF BURRS AND SHARP EDGES

DRAWN: R. PRICE	DATE: 03 SEPT 2011
CHECKED: -	DATE: -
ENGINEERING: -	DATE: -
MANUFACTURING: -	DATE: -
APPROVED: -	DATE:

C P SYSTEMS, INC.
P.O. BOX 780, 20705 E. MARSH STATION RD., VAIL, AZ 85641

TITLE:

INTERFACE - TRUSS TOP RING HOLES

SCALE: 1:10 | SIZE: D | DRAWING NO.: ICD-100135 | REV.: D-03

SHEET: 1 OF 2

SIZE: D | DRAWING NO: ICD-100135 | REV D-03

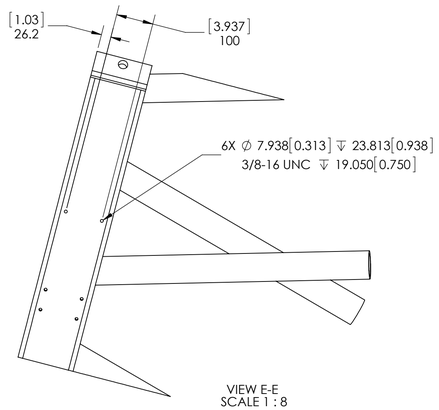

VIEW E-E
SCALE 1 : 8

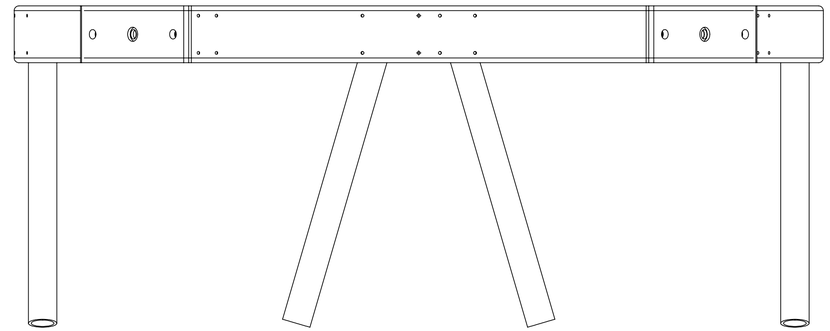

VIEW B-B
SCALE 1 : 8

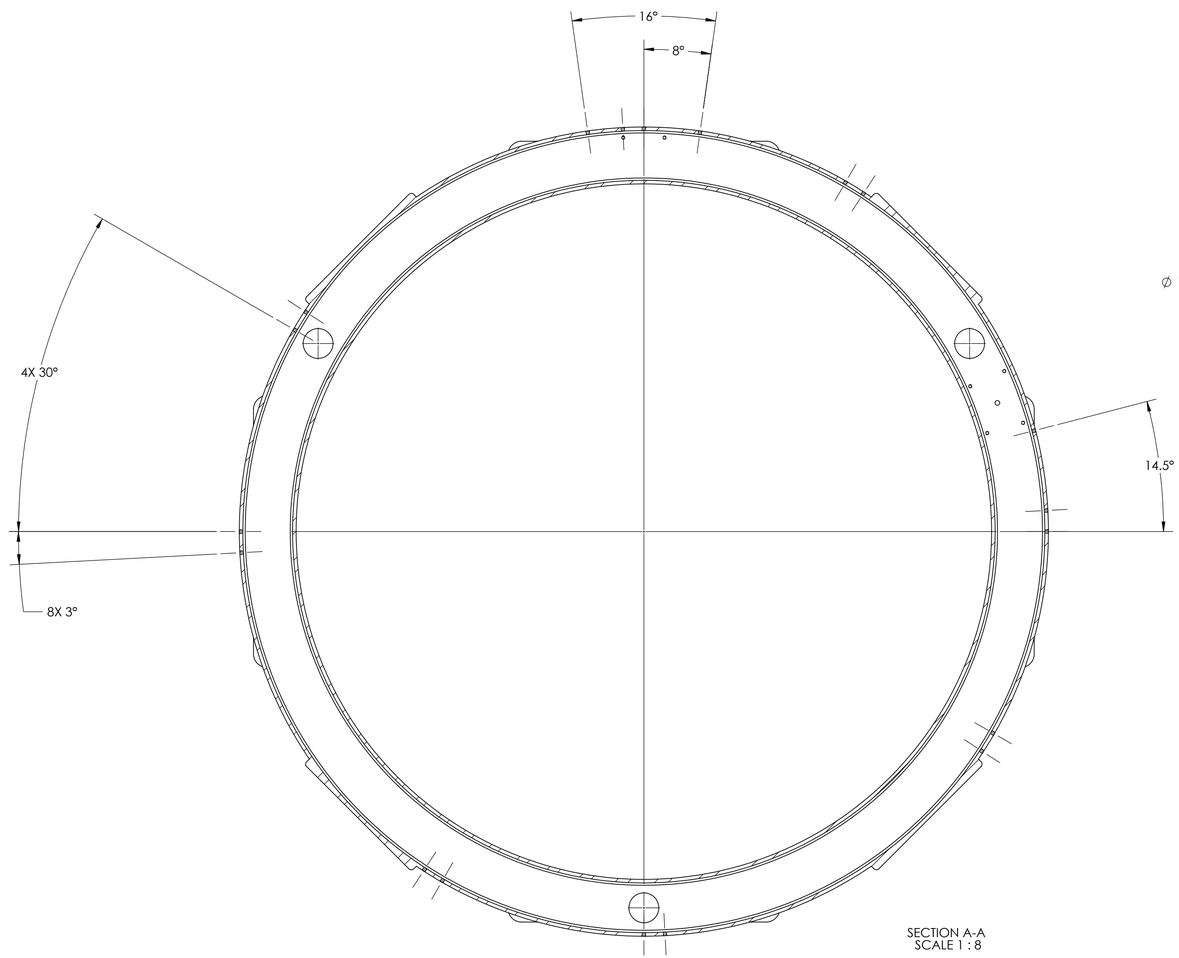

SECTION A-A
SCALE 1 : 8

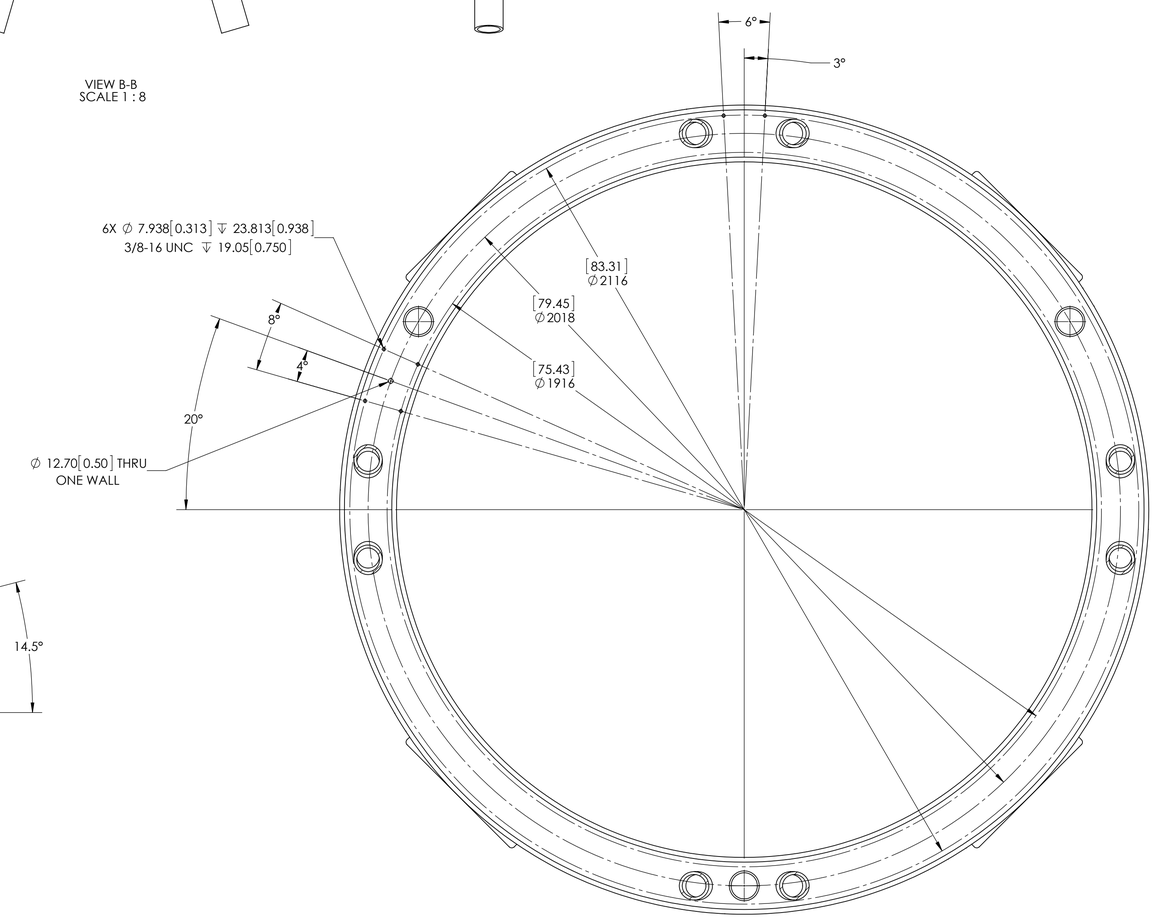

VIEW C-C
SCALE 1 : 8

PROPRIETARY RIGHTS are included in all the information disclosed herein. This information is submitted in confidence, and neither this document nor the information disclosed herein shall be reproduced or transferred to any other document, nor shall it be used or disclosed to any person for manufacturing or any other reason except as specifically authorized in writing by C P Systems, Inc.

© 2011 C P Systems, Inc.

C P SYSTEMS, INC.

P.O. BOX 780, 20705 E. MARSH STATION RD., VAIL, AZ 85641

SCALE: 1:10	SIZE: D	DRAWING NO.: ICD-100135	REV.: D-03
SHEET: 2 OF 2			

REV: D-03
SIZE: D DRAWING NO.: ICD-100135

MATERIAL:
FINISH:
WEIGHT:

REVISIONS				
ZONE	REV.	DESCRIPTION	DATE	APPROVED

NOTES:

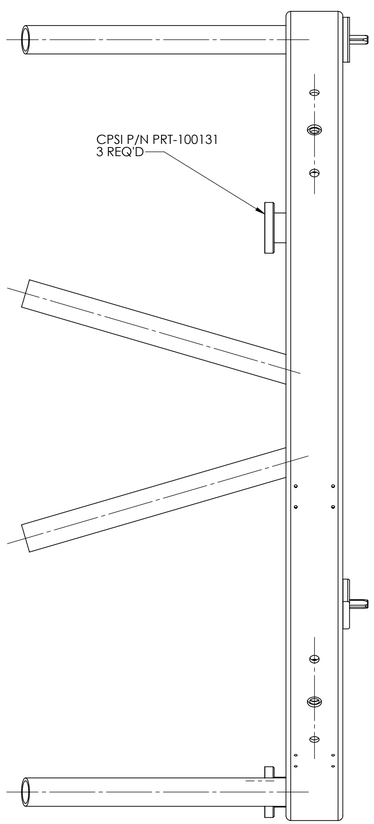

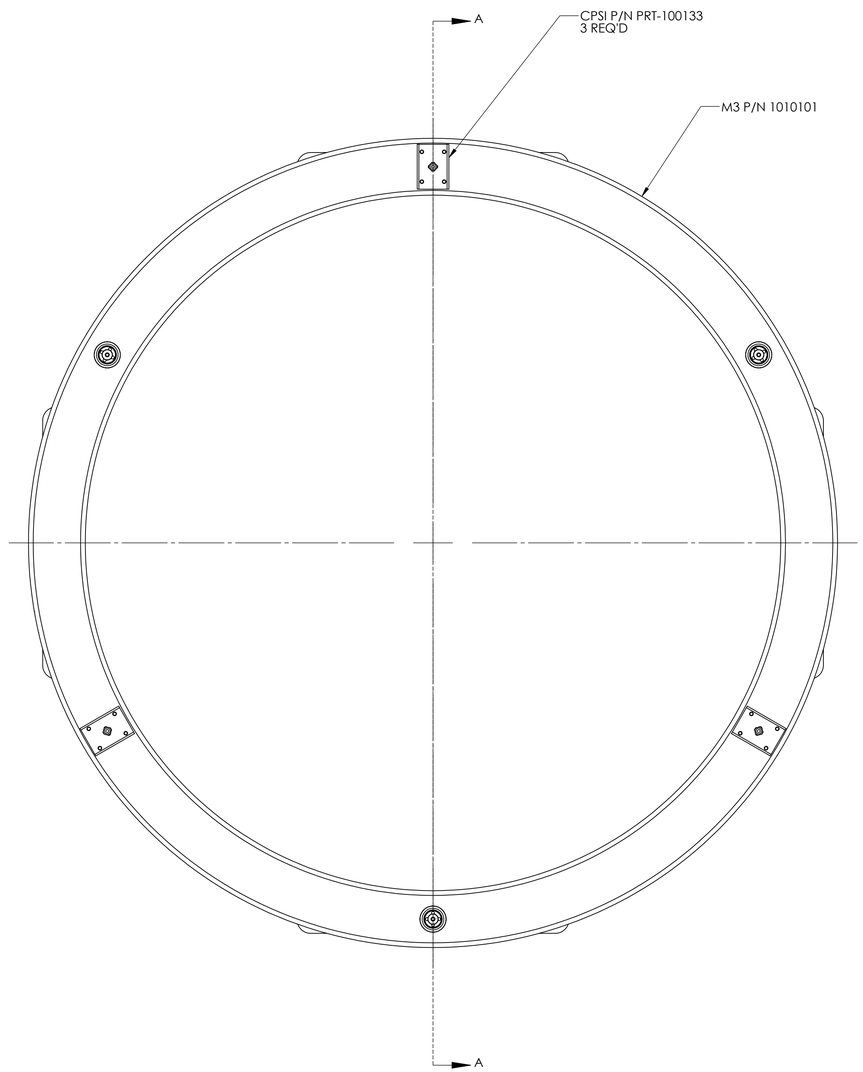

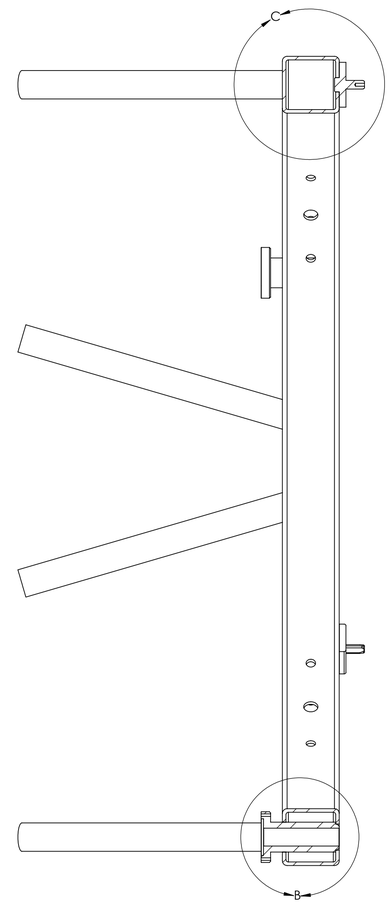

SECTION A-A
SCALE 1 : 8

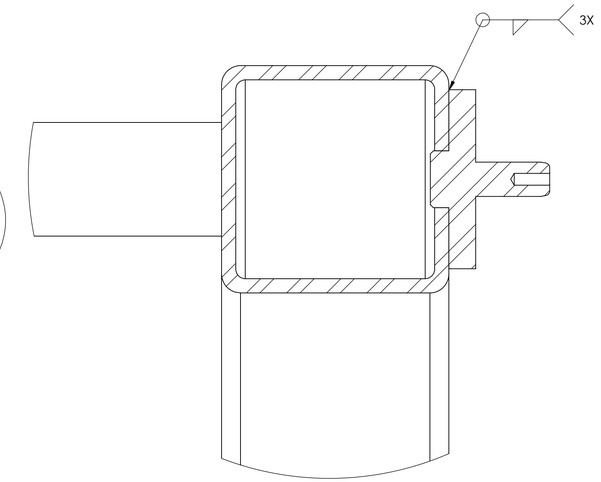

DETAIL C
SCALE 1 : 2

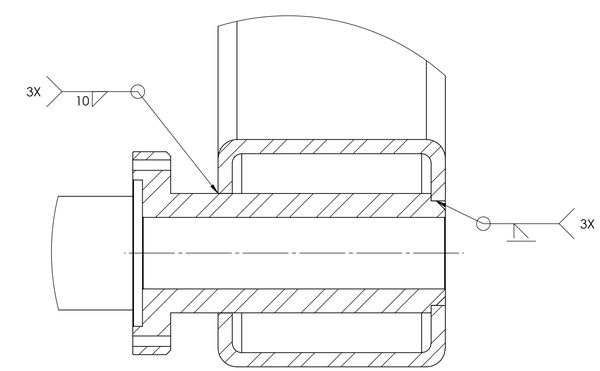

DETAIL B
SCALE 1 : 2

PROPRIETARY RIGHTS are included in all the information disclosed herein. This information is submitted in confidence, and neither this document nor the information disclosed herein shall be reproduced or transferred to any other document, nor shall it be used or disclosed to any person for manufacturing or any other reason except as specifically authorized in writing by C P Systems, Inc.

© 2011 C P Systems, Inc.

THIRD ANGLE PROJECTION

TRIANGULAR FLAG NOTE DENOTES CHANGE FROM PREVIOUS REVISION LEVEL

DO NOT SCALE DRAWING

INTERPRET DRAWING IN ACCORDANCE WITH ASME Y14.5M-1994

REF	KMTNet
NEXT ASSY	USED ON

UNLESS OTHERWISE NOTED:

ALL DIMENSIONS ARE IN MILLIMETERS AND ARE AFTER APPLIED FINISHES

TOLERANCES:

.X: ± .25 .XXX: ± .05
.XX: ± .13 ANGLES: ± 0°30'

ALL PARTS TO BE FREE OF BURRS AND SHARP EDGES

DRAWN:	R. PRICE	DATE:	03 SEPT 2011
CHECKED:		DATE:	
ENGINEERING:		DATE:	
MANUFACTURING:		DATE:	
APPROVED:		DATE:	

C P SYSTEMS, INC.
P.O. BOX 780, 20705 E. MARSH STATION RD., VAIL, AZ 85641

TITLE:

INTERFACE - TRUSS TOP RING ASSY

SCALE: 1:20	SIZE: D	DRAWING NO.: ICD-100136	REV.: REL-A
SHEET: 1 OF 1			

REV REL-A
SIZE: D DRAWING NO.: ICD-100136

MATERIAL:
NOTED
FINISH:
NOTED
WEIGHT:
22409.32 gm

REVISIONS				
ZONE	REV.	DESCRIPTION	DATE	APPROVED

NOTES:

1. MATERIAL: N-BK7 PER MIL-G-174, GRADE A, FINE ANNEALED
   Nd = 1.5168 ± .0005, Vd = 64.2 ± 0.52
2. PITCH POLISH TO NOMINAL VALUE WITHIN POWER AND IRREGULARITY INDICATED.
   TEST WAVELENGTH = 546 nm OR EQUIVALENT.
3. ELEMENT IN ACCORDANCE WITH MIL-O-13830
4. RADII TOLERANCES PERTAIN TO TEST PLATES
   IRREGULARITY TOLERANCES: 2 FRINGES SPHERICAL ERROR FROM TEST PLATE FIT
   2 FRINGES IRREGULARITY OVER THE CLEAR APERTURE
5. SURFACE QUALITY = 80-60
6. EDGE BEVELS .5 X 45°
7. MECHANICAL WEDGE LESS THAN 0.5 ARC-MINUTE
8. ANTI-REFLECTION COAT SURFACES MARKED C
   R<0.5% FOR 430 nm < λ < 1000 nm
   0° TO 30° ANGLE OF INCIDENCE
9. BLACKEN GROUND FACE AND EDGES. DIMENSIONS APPLY AFTER BLACKENING
10. PROTECTIVE BAG AND TAG, "LENS NO. 1, PRT-100061"
11. CLEAR APERTURE:
    R 507.781 546 mm
    R 628.214 532 mm

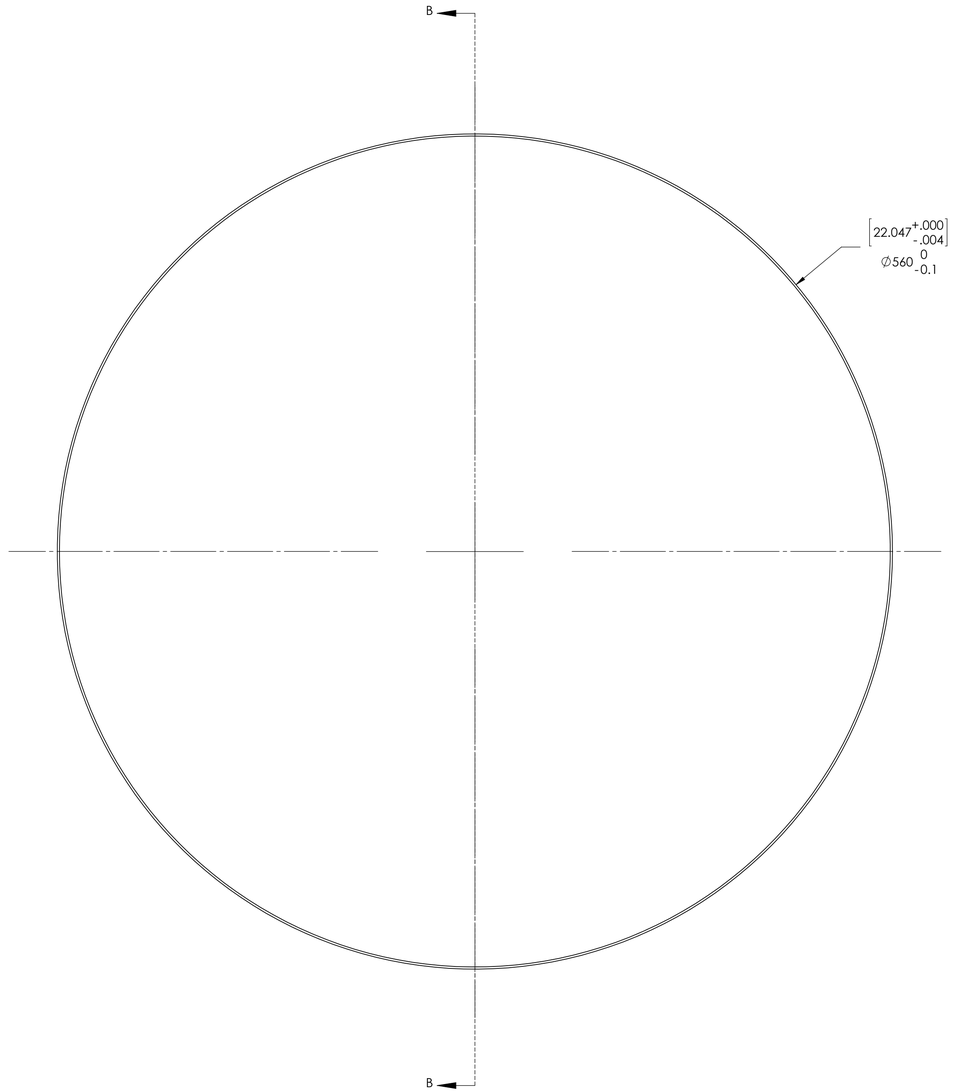

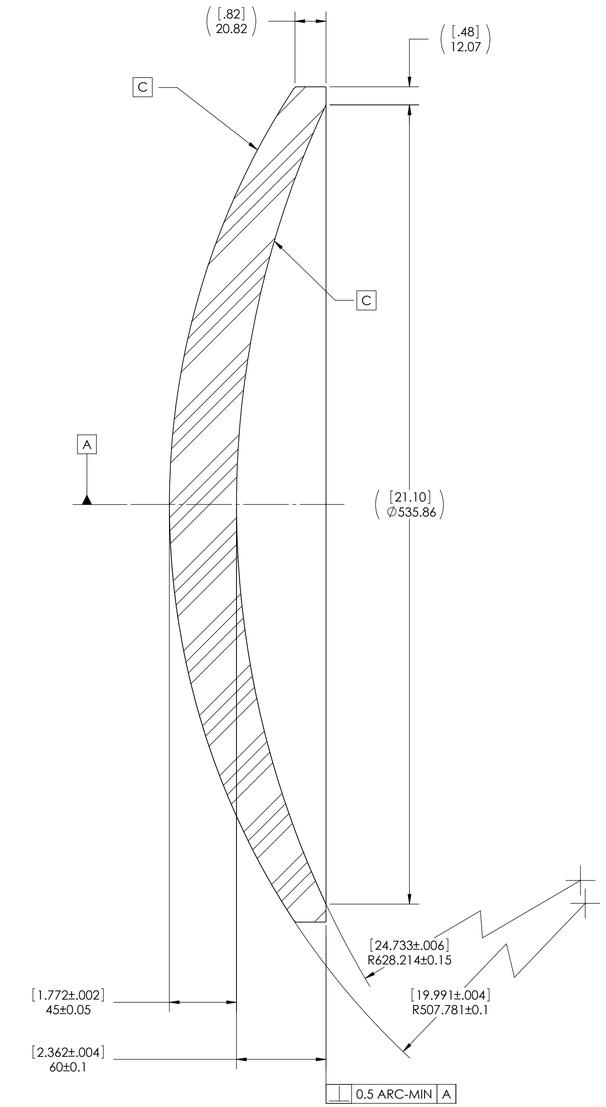

SECTION B-B
SCALE 1 : 2

PROPRIETARY RIGHTS are included in all the information disclosed herein. This information is submitted in confidence, and neither this document nor the information disclosed herein shall be reproduced or transferred to any other document, nor shall it be used or disclosed to any person for manufacturing or any other reason except as specifically authorized in writing by C P Systems, Inc.

© 2011 C P Systems, Inc.

THIRD ANGLE PROJECTION

TRIANGULAR FLAG NOTE DENOTES CHANGE FROM PREVIOUS REVISION LEVEL

DO NOT SCALE DRAWING

INTERPRET DRAWING IN ACCORDANCE WITH ASME Y14.5M-1994

NEXT ASSY	USED ON
ASM-100095	KMTNet

UNLESS OTHERWISE NOTED:

ALL DIMENSIONS ARE IN MILLIMETERS AND ARE AFTER APPLIED FINISHES

TOLERANCES:

.X: ± .25 .XXX: ± .05
.XX: ± .13 ANGLES: ± 0°30'

ALL PARTS TO BE FREE OF BURRS AND SHARP EDGES

DRAWN: R. PRICE	DATE: 04 OCT 2011		
CHECKED: -	DATE: -		
ENGINEERING: -	DATE: -		
MANUFACTURING: -	DATE: -		
APPROVED: -	DATE:		

C P SYSTEMS, INC.
P.O. BOX 780, 20705 E. MARSH STATION RD., VAIL, AZ 85641

TITLE: LENS NO. 1, PRIME FOCUS CORRECTOR

SCALE: 1:5 | SIZE: D | DRAWING NO.: PRT-100061 | REV.: REL-A

SHEET: 1 OF 1

SIZE D | DRAWING NO. PRT-100061 | REV REL-A

MATERIAL:
NOTED
FINISH:
NOTED
WEIGHT:
15647.23 gm

REVISIONS				
ZONE	REV.	DESCRIPTION	DATE	APPROVED

NOTES:

1. MATERIAL: N-BK7 PER MIL-G-174, GRADE A, FINE ANNEALED
   Nd = 1.5168 ± .0005, Vd = 64.2 ± 0.52
2. PITCH POLISH TO NOMINAL VALUE WITHIN POWER AND IRREGULARITY INDICATED.
   TEST WAVELENGTH = 546 nm OR EQUIVALENT.
3. ELEMENT IN ACCORDANCE WITH MIL-O-13830
4. RADII TOLERANCES PERTAIN TO TEST PLATES
   IRREGULARITY TOLERANCES: 2 FRINGES SPHERICAL ERROR FROM TEST PLATE FIT
   2 FRINGES IRREGULARITY OVER THE CLEAR APERTURE
5. SURFACE QUALITY = 80-60
6. EDGE BEVELS .5 X 45°
7. MECHANICAL WEDGE LESS THAN 0.5 ARC-MINUTE
8. ANTI-REFLECTION COAT SURFACES MARKED C
   R<0.5% FOR 430 nm < λ < 1000 nm
   0° TO 30° ANGLE OF INCIDENCE
9. BLACKEN GROUND FACE AND EDGES. DIMENSIONS APPLY AFTER BLACKENING
10. PROTECTIVE BAG AND TAG, "LENS NO. 2, PRT-100062"
11. CLEAR APERTURE
    R 1077.479 410 mm
    R 386.714 386 mm

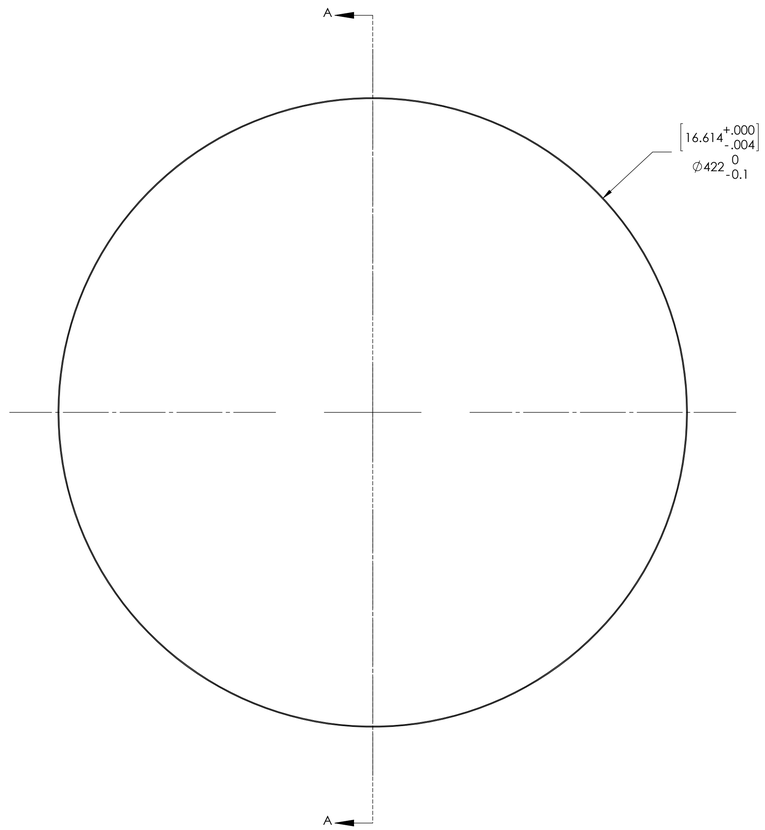

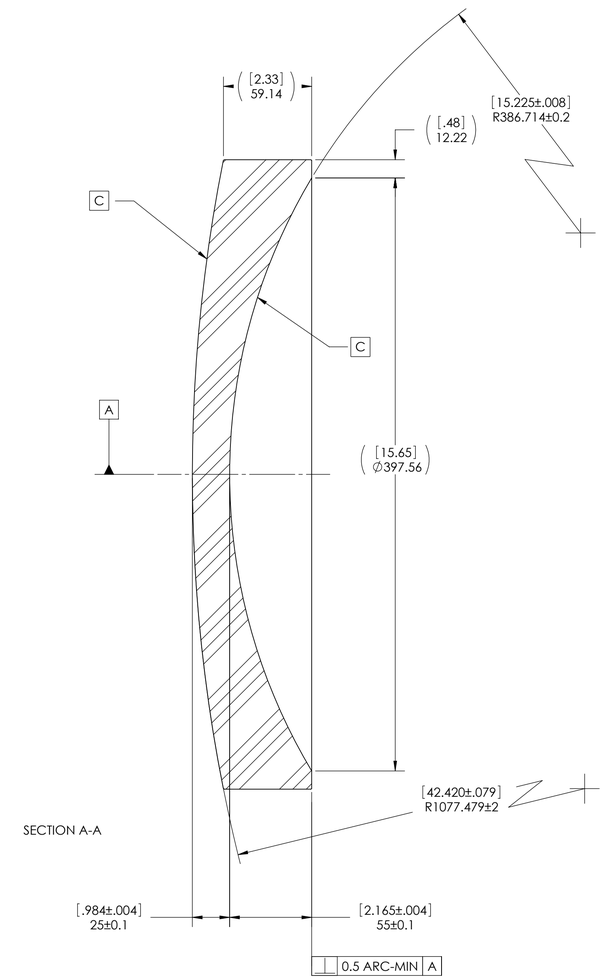

PROPRIETARY RIGHTS are included in all the information disclosed herein. This information is submitted in confidence, and neither this document nor the information disclosed herein shall be reproduced or transferred to any other document, nor shall it be used or disclosed to any person for manufacturing or any other reason except as specifically authorized in writing by C P Systems, Inc.

© 2011 C P Systems, Inc.

THIRD ANGLE PROJECTION

TRIANGULAR FLAG NOTE DENOTES CHANGE FROM PREVIOUS REVISION LEVEL

DO NOT SCALE DRAWING

INTERPRET DRAWING IN ACCORDANCE WITH ASME Y14.5M-1994

NEXT ASSY	USED ON
ASM-100095	KMTNet

UNLESS OTHERWISE NOTED:

ALL DIMENSIONS ARE IN MILLIMETERS AND ARE AFTER APPLIED FINISHES

TOLERANCES:

.X: ± .25 .XXX: ± .05
.XX: ± .13 ANGLES: ± 0°30'

ALL PARTS TO BE FREE OF BURRS AND SHARP EDGES

DRAWN: R. PRICE	DATE: 04 OCT 2011		
CHECKED: -	DATE: -		
ENGINEERING: -	DATE: -		
MANUFACTURING: -	DATE: -		
APPROVED: -	DATE:		

C P SYSTEMS, INC.
P.O. BOX 780, 20705 E. MARSH STATION RD., VAIL, AZ 85641

TITLE:

LENS NO. 2, PRIME FOCUS CORRECTOR

SCALE: 1:2	SIZE: D	DRAWING NO.: PRT-100062	REV.: REL-A
SHEET: 1 OF 1			

REV REL-A
SIZE: D DRAWING NO.: PRT-100062

MATERIAL:
NOTED
FINISH:
NOTED
WEIGHT:
10752.90 gm

REVISIONS				
ZONE	REV.	DESCRIPTION	DATE	APPROVED

NOTES:

1. MATERIAL: N-BK7 PER MIL-G-174, GRADE A, FINE ANNEALED
   Nd = 1.5168 ± .0005, Vd = 64.2 ± 0.52
2. PITCH POLISH TO NOMINAL VALUE WITHIN POWER AND IRREGULARITY INDICATED.
   TEST WAVELENGTH = 546 nm OR EQUIVALENT.
3. ELEMENT IN ACCORDANCE WITH MIL-O-13830
4. RADII TOLERANCES PERTAIN TO TEST PLATES
   IRREGULARITY TOLERANCES: 2 FRINGES SPHERICAL ERROR FROM TEST PLATE FIT
   2 FRINGES IRREGULARITY OVER THE CLEAR APERTURE
5. SURFACE QUALITY = 80-60
6. EDGE BEVELS .5 X 45°
7. MECHANICAL WEDGE LESS THAN 0.5 ARC-MINUTE
8. ANTI-REFLECTION COAT SURFACES MARKED C
   R<0.5% FOR 430 nm < λ < 1000 nm
   0° TO 30° ANGLE OF INCIDENCE
9. BLACKEN GROUND FACE AND EDGES. DIMENSIONS APPLY AFTER BLACKENING
10. PROTECTIVE BAG AND TAG, "LENS NO. 3, PRT-100063"
11. CLEAR APERTURE:
    R 1988.079 374 mm
    R 1237.266 376 mm

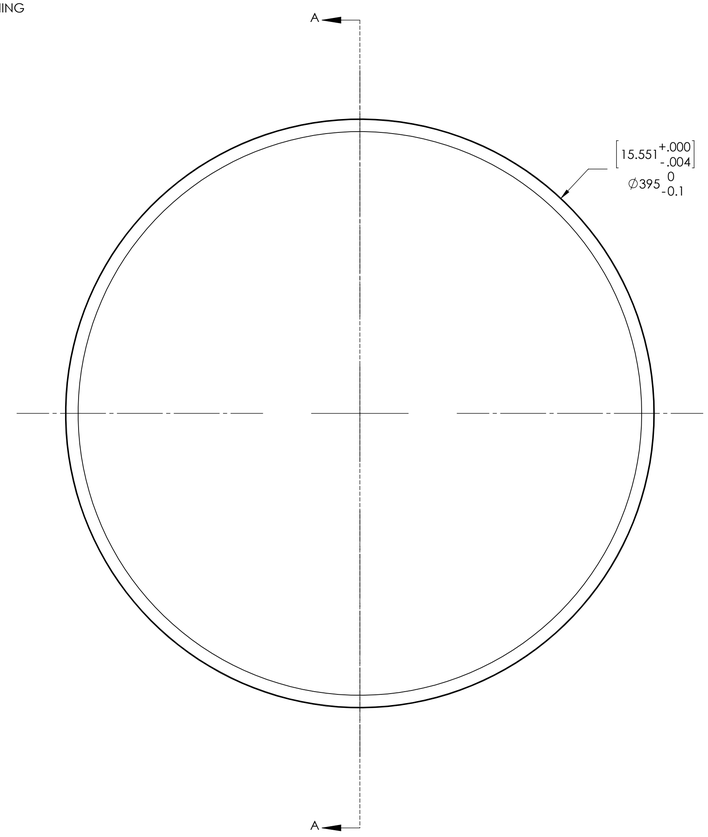

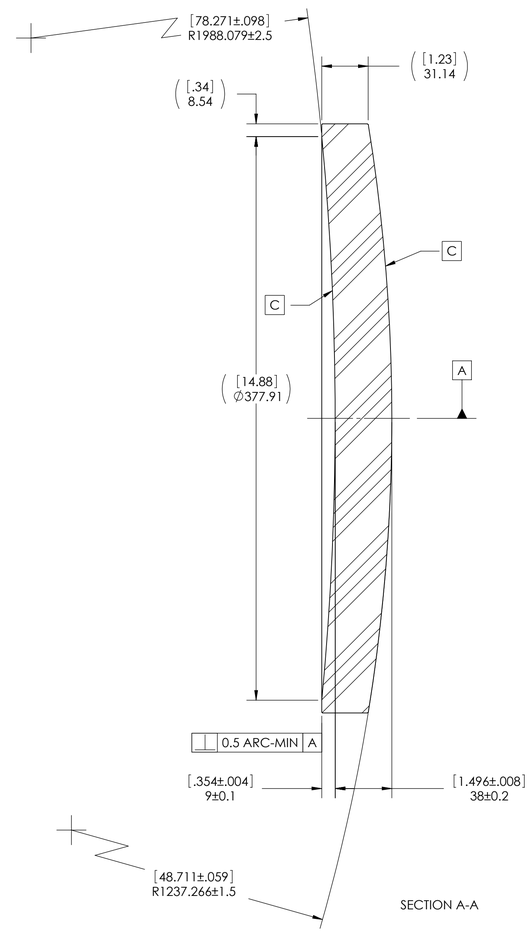

SECTION A-A

PROPRIETARY RIGHTS are included in all the information disclosed herein. This information is submitted in confidence, and neither this document nor the information disclosed herein shall be reproduced or transferred to any other document, nor shall it be used or disclosed to any person for manufacturing or any other reason except as specifically authorized in writing by C P Systems, Inc.

© 2011 C P Systems, Inc.

THIRD ANGLE PROJECTION

TRIANGULAR FLAG NOTE DENOTES CHANGE FROM PREVIOUS REVISION LEVEL

DO NOT SCALE DRAWING

INTERPRET DRAWING IN ACCORDANCE WITH ASME Y14.5M-1994

NEXT ASSY	USED ON
ASM-1000	KMTNet

UNLESS OTHERWISE NOTED:

ALL DIMENSIONS ARE IN MILLIMETERS AND ARE AFTER APPLIED FINISHES

TOLERANCES:

.X: ± .25 .XXX: ± .05
.XX: ± .13 ANGLES: ± 0°30'

ALL PARTS TO BE FREE OF BURRS AND SHARP EDGES

DRAWN: R. PRICE	DATE: 04 OCT 2011	
CHECKED: -	DATE: -	
ENGINEERING: -	DATE: -	
MANUFACTURING: -	DATE: -	
APPROVED: -	DATE:	

C P SYSTEMS, INC.
P.O. BOX 780, 20705 E. MARSH STATION RD., VAIL, AZ 85641

TITLE:

LENS NO. 3, PRIME FOCUS CORRECTOR

SCALE: 1:2	SIZE: D	DRAWING NO.: PRT-100063	REV.: REL-A
SHEET: 1 OF 1			

SIZE D | DRAWING NO. PRT-100063 | REV REL-A

MATERIAL:
Fused Silica
FINISH:
NOTED
WEIGHT:
5884.78 gm

REVISIONS				
ZONE	REV.	DESCRIPTION	DATE	APPROVED

NOTES:

1. MATERIAL: OPTICAL GRADE FUSED SILICA, PER MIL-G-174, GRADE A, FINE ANNEALED
2. PITCH POLISH TO NOMINAL VALUE WITHIN POWER AND IRREGULARITY INDICATED.
   TEST WAVELENGTH = 546 nm OR EQUIVALENT.
3. ELEMENT IN ACCORDANCE WITH MIL-O-13830
4. RADII TOLERANCES PERTAIN TO TEST PLATES
   IRREGULARITY TOLERANCES: 2 FRINGES SPHERICAL ERROR FROM TEST PLATE FIT
   2 FRINGES IRREGULARITY OVER THE CLEAR APERTURE
5. SURFACE QUALITY = 80-60
6. EDGE BEVELS .5 X 45°
7. MECHANICAL WEDGE LESS THAN 0.5 ARC-MINUTE
8. ANTI-REFLECTION COAT SURFACES MARKED C
   R<0.5% FOR 430 nm < λ < 1000 nm
   0° TO 30° ANGLE OF INCIDENCE
9. BLACKEN GROUND FACE AND EDGES. DIMENSIONS APPLY AFTER BLACKENING
10. PROTECTIVE BAG AND TAG, "LENS NO. 4, PRT-100064"
11. CLEAR APERTURE:
    R 453.709 316 mm
    R 2373.437 308 mm

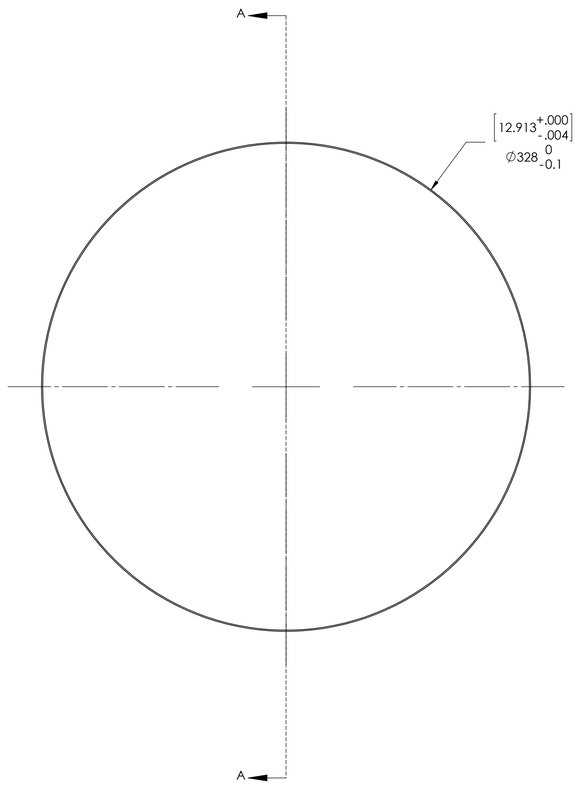

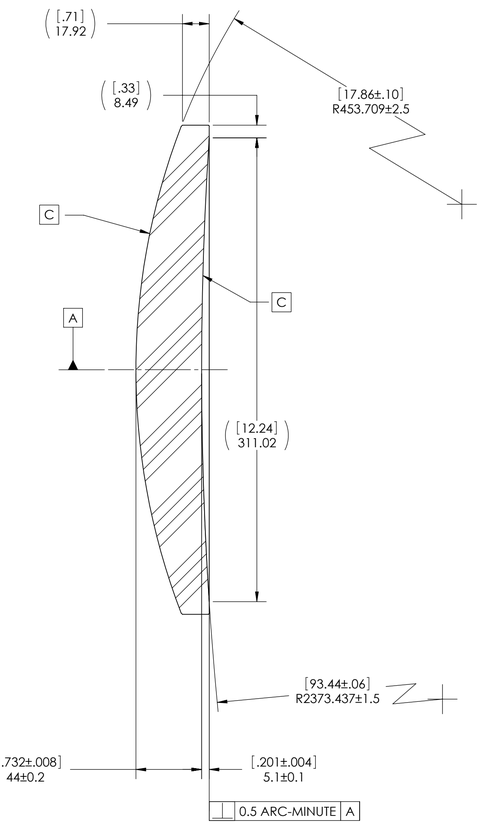

SECTION A-A

PROPRIETARY RIGHTS are included in all the information disclosed herein. This information is submitted in confidence, and neither this document nor the information disclosed herein shall be reproduced or transferred to any other document, nor shall it be used or disclosed to any person for manufacturing or any other reason except as specifically authorized in writing by C P Systems, Inc.

© 2011 C P Systems, Inc.

THIRD ANGLE PROJECTION

TRIANGULAR FLAG NOTE DENOTES CHANGE FROM PREVIOUS REVISION LEVEL

DO NOT SCALE DRAWING

INTERPRET DRAWING IN ACCORDANCE WITH ASME Y14.5M-1994

-	KMTNet
NEXT ASSY	USED ON

UNLESS OTHERWISE NOTED:

ALL DIMENSIONS ARE IN MILLIMETERS AND ARE AFTER APPLIED FINISHES

TOLERANCES:

.X: ± .25 .XXX: ± .05
.XX: ± .13 ANGLES: ± 0°30'

ALL PARTS TO BE FREE OF BURRS AND SHARP EDGES

DRAWN: R. PRICE	DATE: 15 OCT 2011		
CHECKED: -	DATE: -		
ENGINEERING: -	DATE: -		
MANUFACTURING: -	DATE: -		
APPROVED: -	DATE:		

C P SYSTEMS, INC.
P.O. BOX 780, 20705 E. MARSH STATION RD., VAIL, AZ 85641

TITLE:

LENS NO. 4, PRIME FOCUS CORRECTOR

SCALE: 1:2	SIZE: D	DRAWING NO.: PRT-100064	REV.: REL-A
SHEET: 1 OF 1			

SIZE: D DRAWING NO.: PRT-100064 REV REL-A

MATERIAL:
6061 Alloy T6
FINISH:
NOTED
WEIGHT:
10856.19 gm

REVISIONS				
ZONE	REV.	DESCRIPTION	DATE	APPROVED

NOTES:

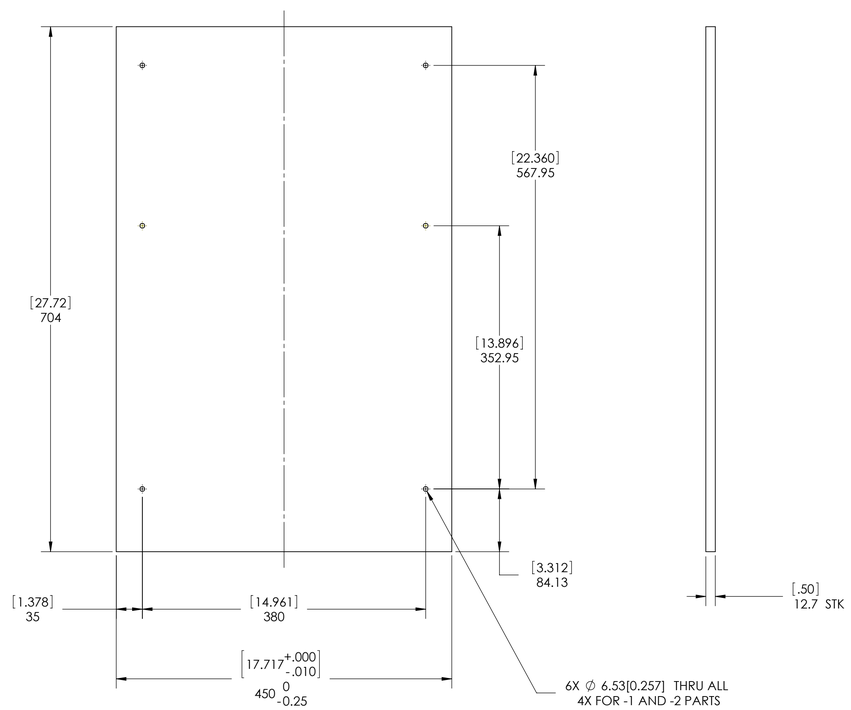

-1 PART

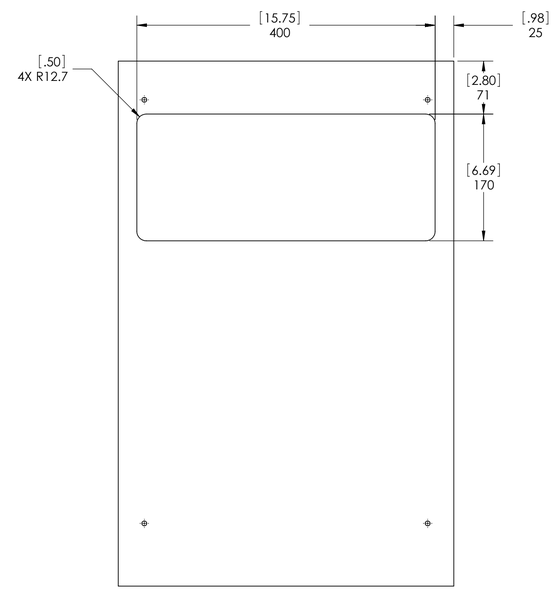

-2 PART

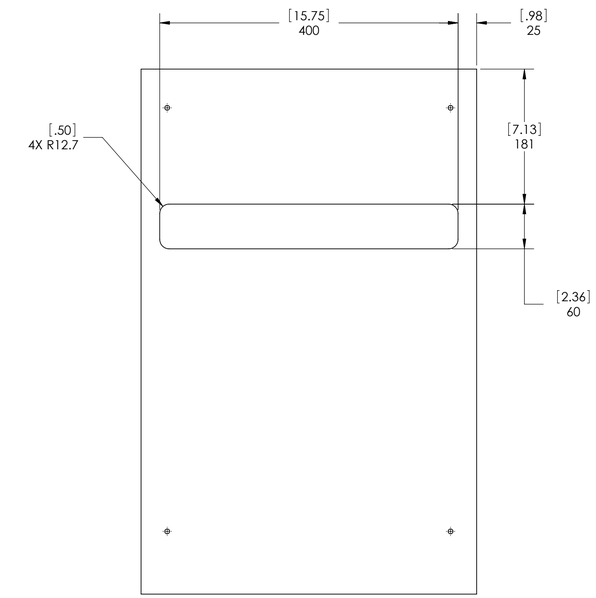

-3 PART

PROPRIETARY RIGHTS are included in all the information disclosed herein. This information is submitted in confidence, and neither this document nor the information disclosed herein shall be reproduced or transferred to any other document, nor shall it be used or disclosed to any person for manufacturing or any other reason except as specifically authorized in writing by C P Systems, Inc.

© 2011 C P Systems, Inc.

THIRD ANGLE PROJECTION

TRIANGULAR FLAG NOTE DENOTES CHANGE FROM PREVIOUS REVISION LEVEL

DO NOT SCALE DRAWING

INTERPRET DRAWING IN ACCORDANCE WITH ASME Y14.5M-1994

NEXT ASSY	USED ON
ASM-100066	KMTNet

UNLESS OTHERWISE NOTED:

ALL DIMENSIONS ARE IN MILLIMETERS AND ARE AFTER APPLIED FINISHES

TOLERANCES:

.X: ± .25 .XXX: ± .05
.XX: ± .13 ANGLES: ± 0°30'

ALL PARTS TO BE FREE OF BURRS AND SHARP EDGES

DRAWN: R PRICE	DATE: 29 SEPT 2011		
CHECKED: -	DATE: -		
ENGINEERING: -	DATE: -		
MANUFACTURING: -	DATE: -		
APPROVED: -	DATE:		

C P SYSTEMS, INC.
P.O. BOX 780, 20705 E. MARSH STATION RD., VAIL, AZ 85641

TITLE: SIDE PLATE

SCALE: 1:2	SIZE: D	DRAWING NO.: PRT-100067	REV.: REL-A
SHEET: 1 OF 1			

SIZE: D DRAWING NO.: PRT-100067 REV REL-A

MATERIAL:
6061 Alloy T6
FINISH:
NOTED
WEIGHT:
2560.37 gm

REVISIONS				
ZONE	REV.	DESCRIPTION	DATE	APPROVED

NOTES:

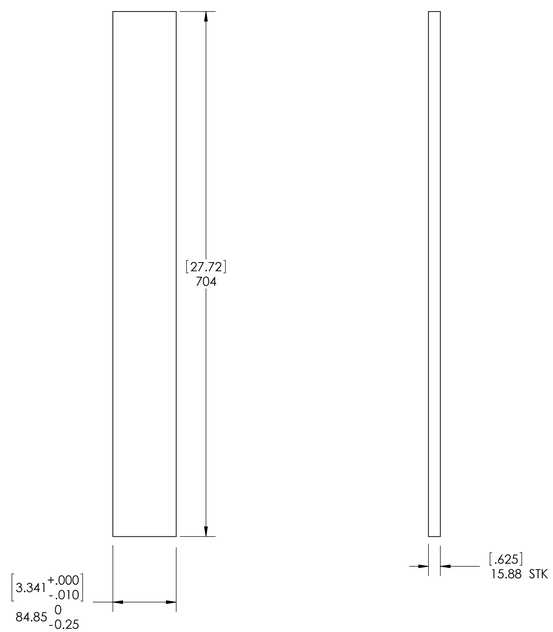

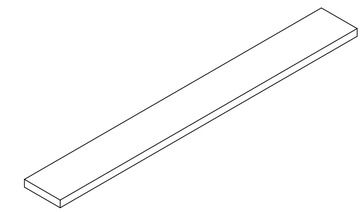

ISOMETRIC VIEW
FOR REFERENCE ONLY
SCALE: NONE

PROPRIETARY RIGHTS are included in all the information disclosed herein. This information is submitted in confidence, and neither this document nor the information disclosed herein shall be reproduced or transferred to any other document, nor shall it be used or disclosed to any person for manufacturing or any other reason except as specifically authorized in writing by C P Systems, Inc.

© 2011 C P Systems, Inc.

THIRD ANGLE PROJECTION

TRIANGULAR FLAG NOTE DENOTES CHANGE FROM PREVIOUS REVISION LEVEL

DO NOT SCALE DRAWING

INTERPRET DRAWING IN ACCORDANCE WITH ASME Y14.5M-1994

NEXT ASSY	USED ON
ASM-100066	KMTNet

UNLESS OTHERWISE NOTED:

ALL DIMENSIONS ARE IN MILLIMETERS AND ARE AFTER APPLIED FINISHES

TOLERANCES:

.X: ± .25 .XXX: ± .05
.XX: ± .13 ANGLES: ± 0°30'

ALL PARTS TO BE FREE OF BURRS AND SHARP EDGES

DRAWN: R. PRICE	DATE: 29 SEPT 2011
CHECKED: -	DATE: -
ENGINEERING: -	DATE: -
MANUFACTURING: -	DATE: -
APPROVED: -	DATE:

C P SYSTEMS, INC.
P.O. BOX 780, 20705 E. MARSH STATION RD., VAIL, AZ 85641

TITLE:
VANE PLATE

SCALE: 1:5	SIZE: D	DRAWING NO.: prt-100068	REV.: REL-A
SHEET: 1 OF 1			

REV REL-A
SIZE: D DRAWING NO: prt-100068

MATERIAL:
6061 Alloy T6
FINISH:
NOTED
WEIGHT:
5817.83 gm

REVISIONS				
ZONE	REV.	DESCRIPTION	DATE	APPROVED

NOTES:

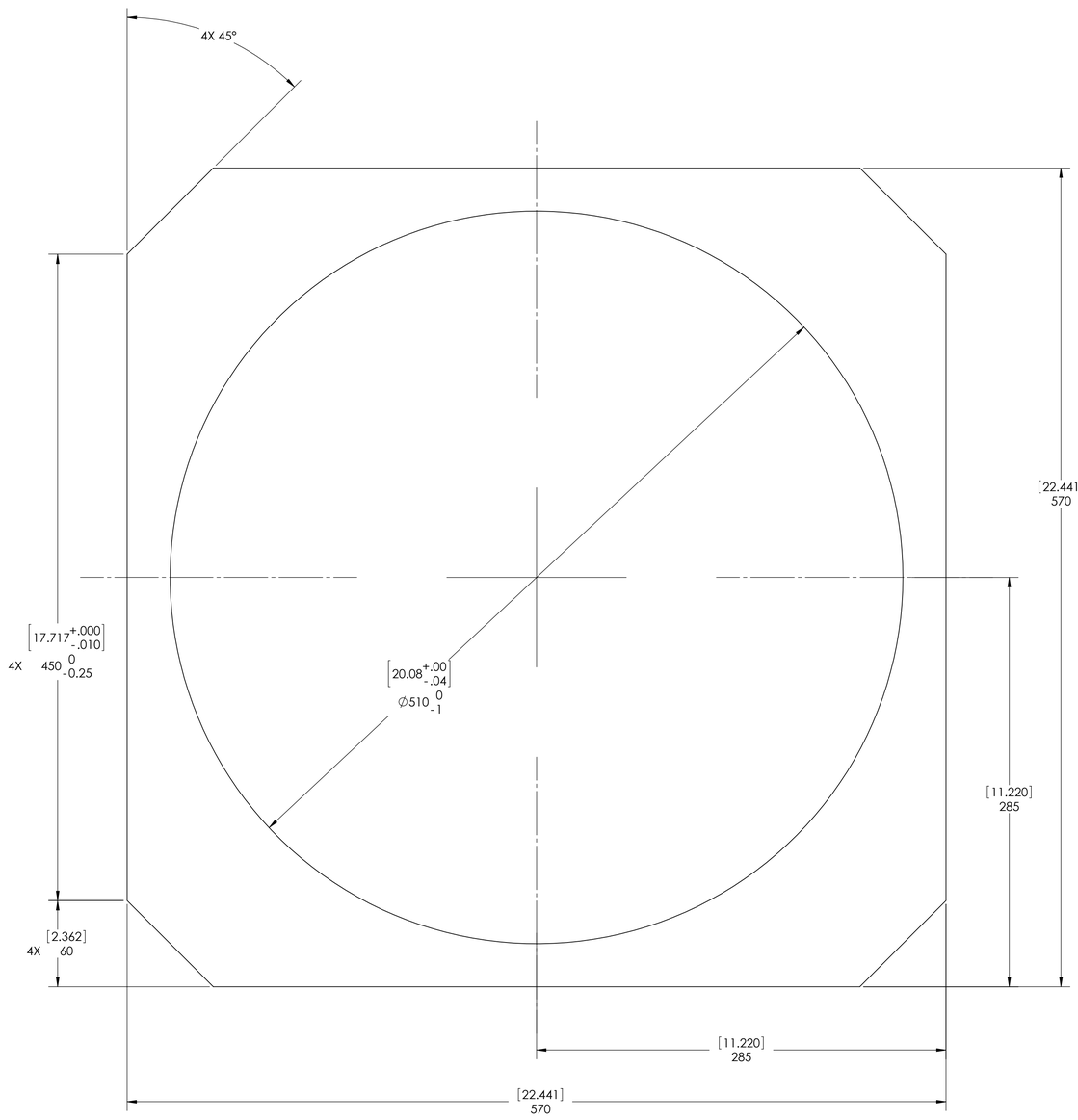

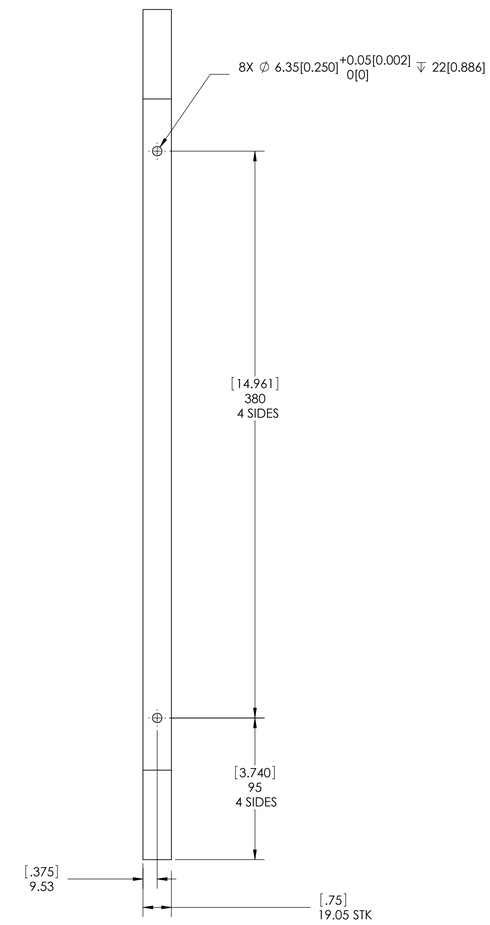

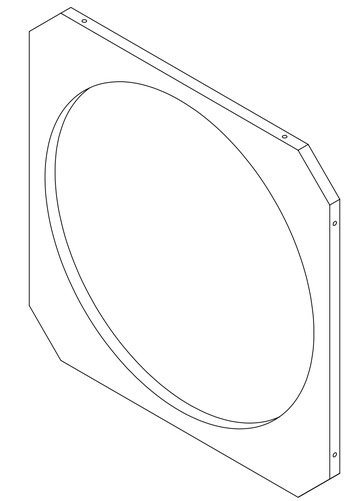

ISOMETRIC VIEW
FOR REFERENCE ONLY
SCALE: NONE

PROPRIETARY RIGHTS are included in all the information disclosed herein. This information is submitted in confidence, and neither this document nor the information disclosed herein shall be reproduced or transferred to any other document, nor shall it be used or disclosed to any person for manufacturing or any other reason except as specifically authorized in writing by C P Systems, Inc.

© 2011 C P Systems, Inc.

THIRD ANGLE PROJECTION

TRIANGULAR FLAG NOTE DENOTES CHANGE FROM PREVIOUS REVISION LEVEL

DO NOT SCALE DRAWING

INTERPRET DRAWING IN ACCORDANCE WITH ASME Y14.5M-1994

NEXT ASSY	USED ON
ASM-100066	KMTNet

UNLESS OTHERWISE NOTED:

ALL DIMENSIONS ARE IN MILLIMETERS AND ARE AFTER APPLIED FINISHES

TOLERANCES:

.X: ± .25 .XXX: ± .05
.XX: ± .13 ANGLES: ± 0°30'

ALL PARTS TO BE FREE OF BURRS AND SHARP EDGES

DRAWN: RP	DATE: 29 SEPT 2011		
CHECKED: -	DATE: -		
ENGINEERING: -	DATE: -		
MANUFACTURING: -	DATE: -		
APPROVED: -	DATE:		

C P SYSTEMS, INC.
P.O. BOX 780, 20705 E. MARSH STATION RD., VAIL, AZ 85641

TITLE:

LENS PLATE NO. 1

SCALE: 1:2	SIZE: D	DRAWING NO.: PRT-100069	REV.: REL-A
SHEET: 1 OF 1			

SIZE: D DRAWING NO.: PRT-100069 REV REL-A

MATERIAL:
6061 Alloy T6
FINISH:
NOTED
WEIGHT:
11157.02 gm

REVISIONS				
ZONE	REV.	DESCRIPTION	DATE	APPROVED

NOTES:

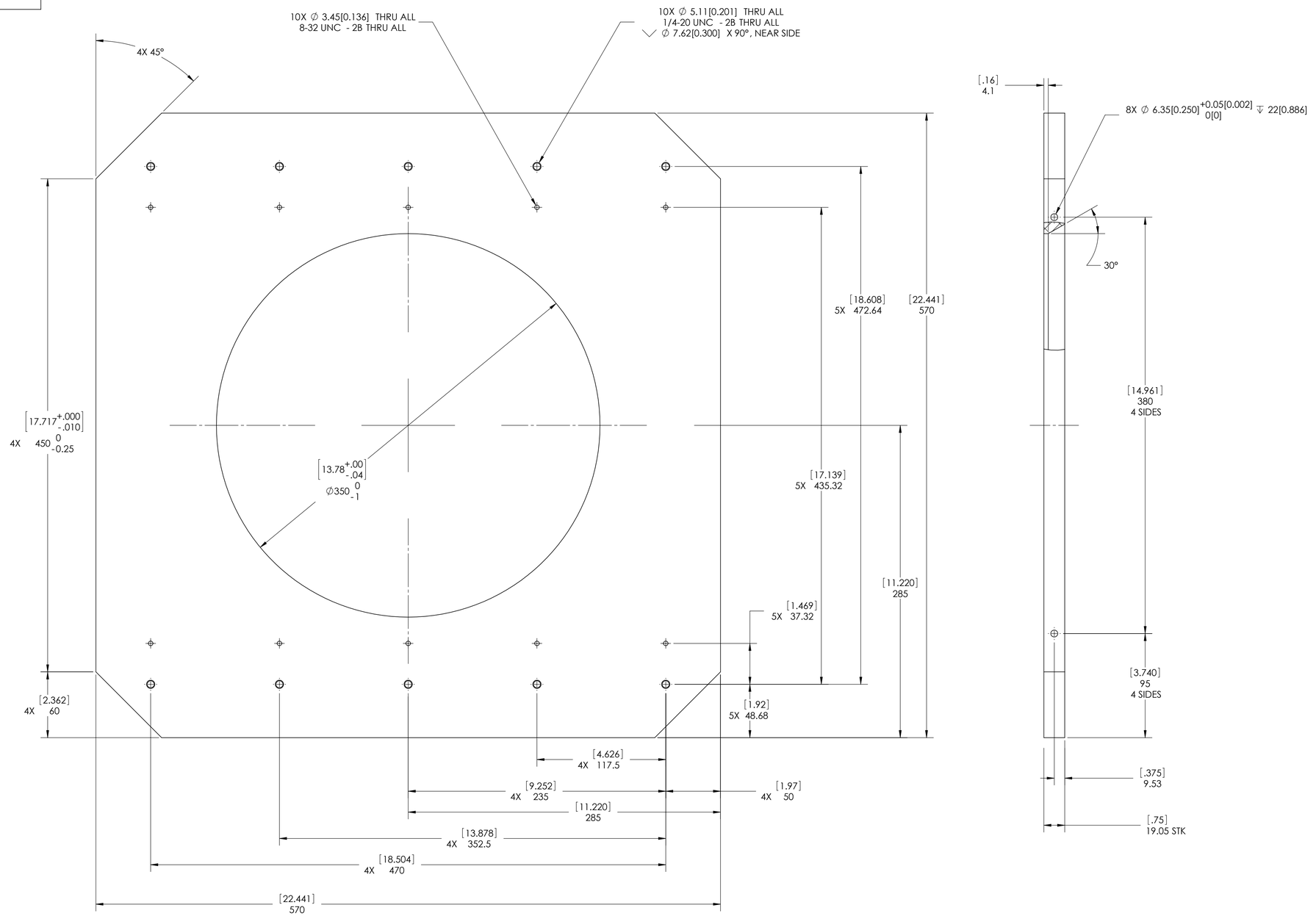

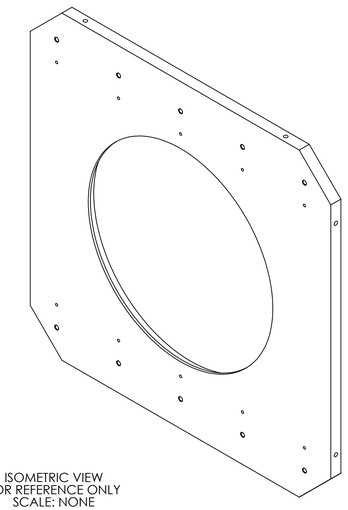

ISOMETRIC VIEW
FOR REFERENCE ONLY
SCALE: NONE

PROPRIETARY RIGHTS are included in all the information disclosed herein. This information is submitted in confidence, and neither this document nor the information disclosed herein shall be reproduced or transferred to any other document, nor shall it be used or disclosed to any person for manufacturing or any other reason except as specifically authorized in writing by C P Systems, Inc.

© 2011 C P Systems, Inc.

THIRD ANGLE PROJECTION

TRIANGULAR FLAG NOTE DENOTES CHANGE FROM PREVIOUS REVISION LEVEL

DO NOT SCALE DRAWING

INTERPRET DRAWING IN ACCORDANCE WITH ASME Y14.5M-1994

NEXT ASSY	USED ON
ASM-100066	KMTNet

UNLESS OTHERWISE NOTED:

ALL DIMENSIONS ARE IN MILLIMETERS AND ARE AFTER APPLIED FINISHES

TOLERANCES:

.X: ± .25 .XXX: ± .05
.XX: ± .13 ANGLES: ± 0°30'

ALL PARTS TO BE FREE OF BURRS AND SHARP EDGES

DRAWN: R. PRICE	DATE: 29 SEPT 2011		
CHECKED: -	DATE: -		
ENGINEERING: -	DATE: -		
MANUFACTURING: -	DATE: -		
APPROVED: -	DATE:		

C P SYSTEMS, INC.
P.O. BOX 780, 20705 E. MARSH STATION RD., VAIL, AZ 85641

TITLE: LENS PLATE NO. 2

SCALE: 1:2	SIZE: D	DRAWING NO.: PRT-100070	REV.: REL-A
SHEET: 1 OF 1			

REV REL-A
SIZE: D DRAWING NO.: PRT-100070

MATERIAL:
6061 Alloy T6
FINISH:
NOTED
WEIGHT:
11355.81 gm

REVISIONS				
ZONE	REV.	DESCRIPTION	DATE	APPROVED

NOTES:

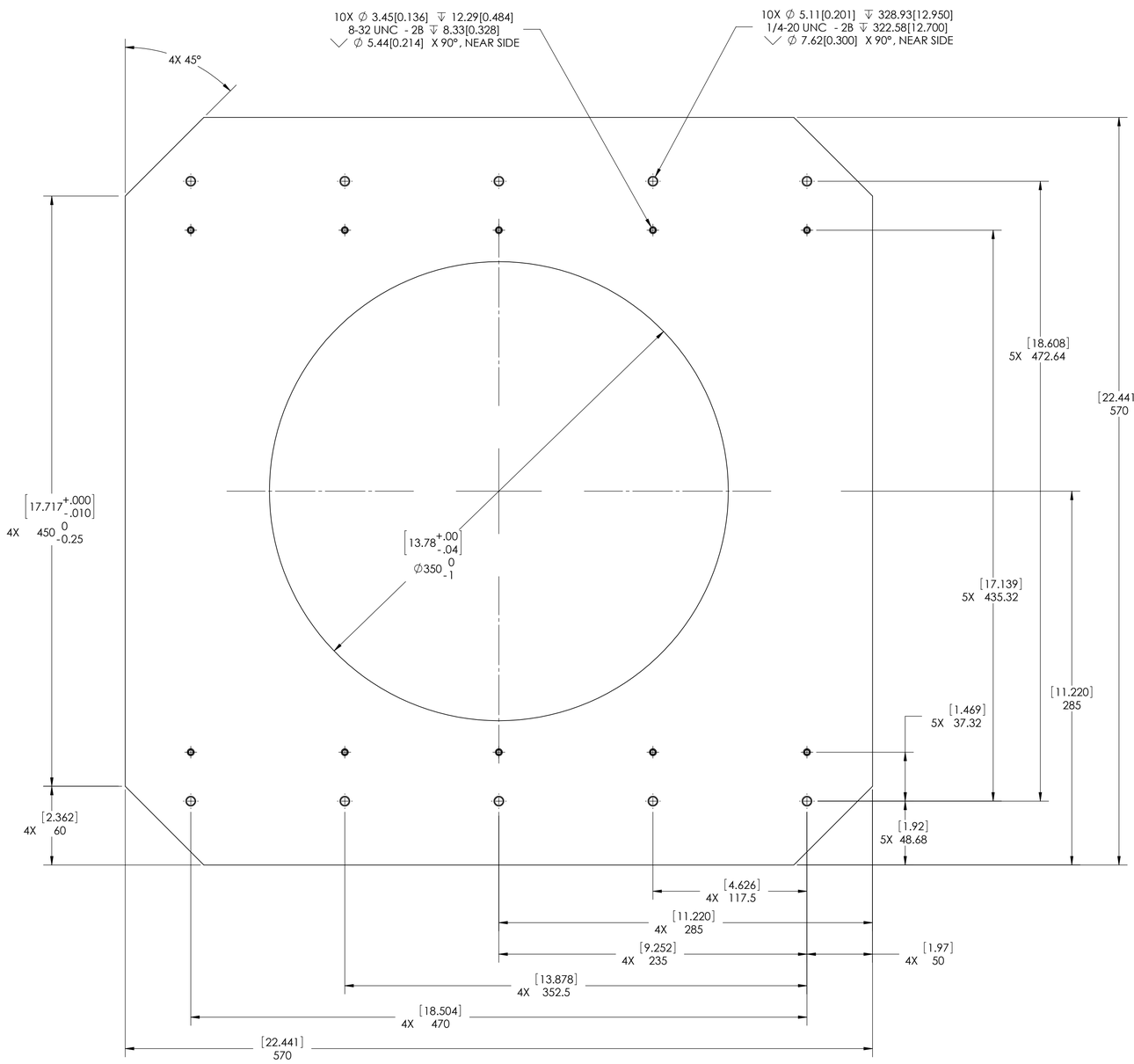

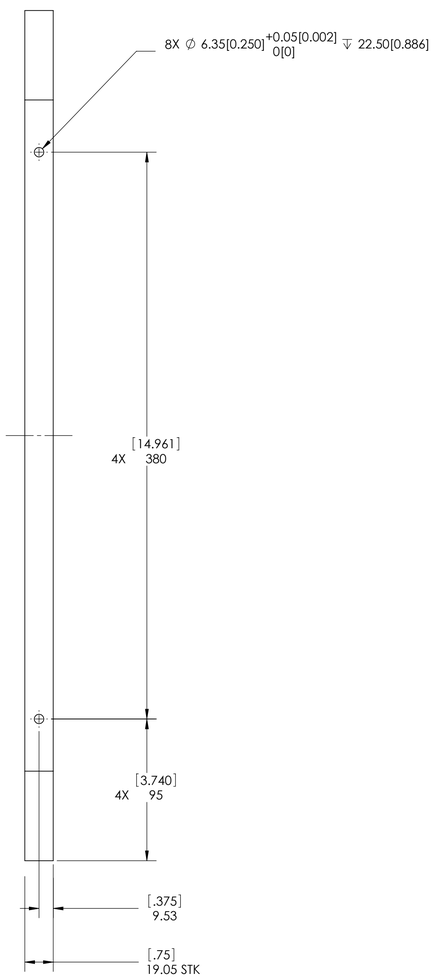

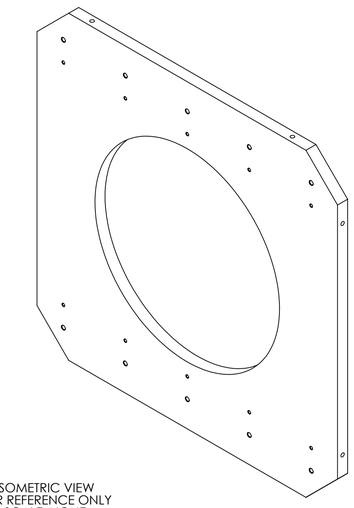

ISOMETRIC VIEW
FOR REFERENCE ONLY
SCALE: NONE

PROPRIETARY RIGHTS are included in all the information disclosed herein. This information is submitted in confidence, and neither this document nor the information disclosed herein shall be reproduced or transferred to any other document, nor shall it be used or disclosed to any person for manufacturing or any other reason except as specifically authorized in writing by C P Systems, Inc.

© 2011 C P Systems, Inc.

THIRD ANGLE PROJECTION

TRIANGULAR FLAG NOTE DENOTES CHANGE FROM PREVIOUS REVISION LEVEL

DO NOT SCALE DRAWING

INTERPRET DRAWING IN ACCORDANCE WITH ASME Y14.5M-1994

NEXT ASSY	USED ON
ASM-100066	KMTNet

UNLESS OTHERWISE NOTED:

ALL DIMENSIONS ARE IN MILLIMETERS AND ARE AFTER APPLIED FINISHES

TOLERANCES:

.X: ± .25 .XXX: ± .05
.XX: ± .13 ANGLES: ± 0°30'

ALL PARTS TO BE FREE OF BURRS AND SHARP EDGES

DRAWN: R. PRICE	DATE: 29 SEPT 2011		
CHECKED: -	DATE: -		
ENGINEERING: -	DATE: -		
MANUFACTURING: -	DATE: -		
APPROVED: -	DATE:		

C P SYSTEMS, INC.
P.O. BOX 780, 20705 E. MARSH STATION RD., VAIL, AZ 85641

TITLE:

LENS PLATE NO. 3

SCALE: 1:2	SIZE: D	DRAWING NO.: PRT-100071	REV.: REL-A
SHEET: 1 OF 1			

SIZE: D DRAWING NO: PRT-100071 REV REL-A

MATERIAL:
6061 Alloy T6
FINISH:
NOTED
WEIGHT:
29752.99 gm

NOTES:

1. ROUGH MACHINE PART TO WITHIN 1.25mm [.050"] OF FINISHED DIMENSIONS. STRESS RELIEVE PRIOR TO FINAL MACHINING.
2. FINISH: ANODIZE PER MIL-A-8625, CLASS II, TYPE 2 COLOR: BLACK

   PAINT SURFACES MARKED [P] WITH LOW REFLECTION

   FLAT BLACK COATING. REFER TO CPSI DOCUMENT KMTNet TELESCOPE SURFACE FINISHES. MASK ALL HOLES AND THREADED HOLES.

REVISIONS				
ZONE	REV.	DESCRIPTION	DATE	APPROVED

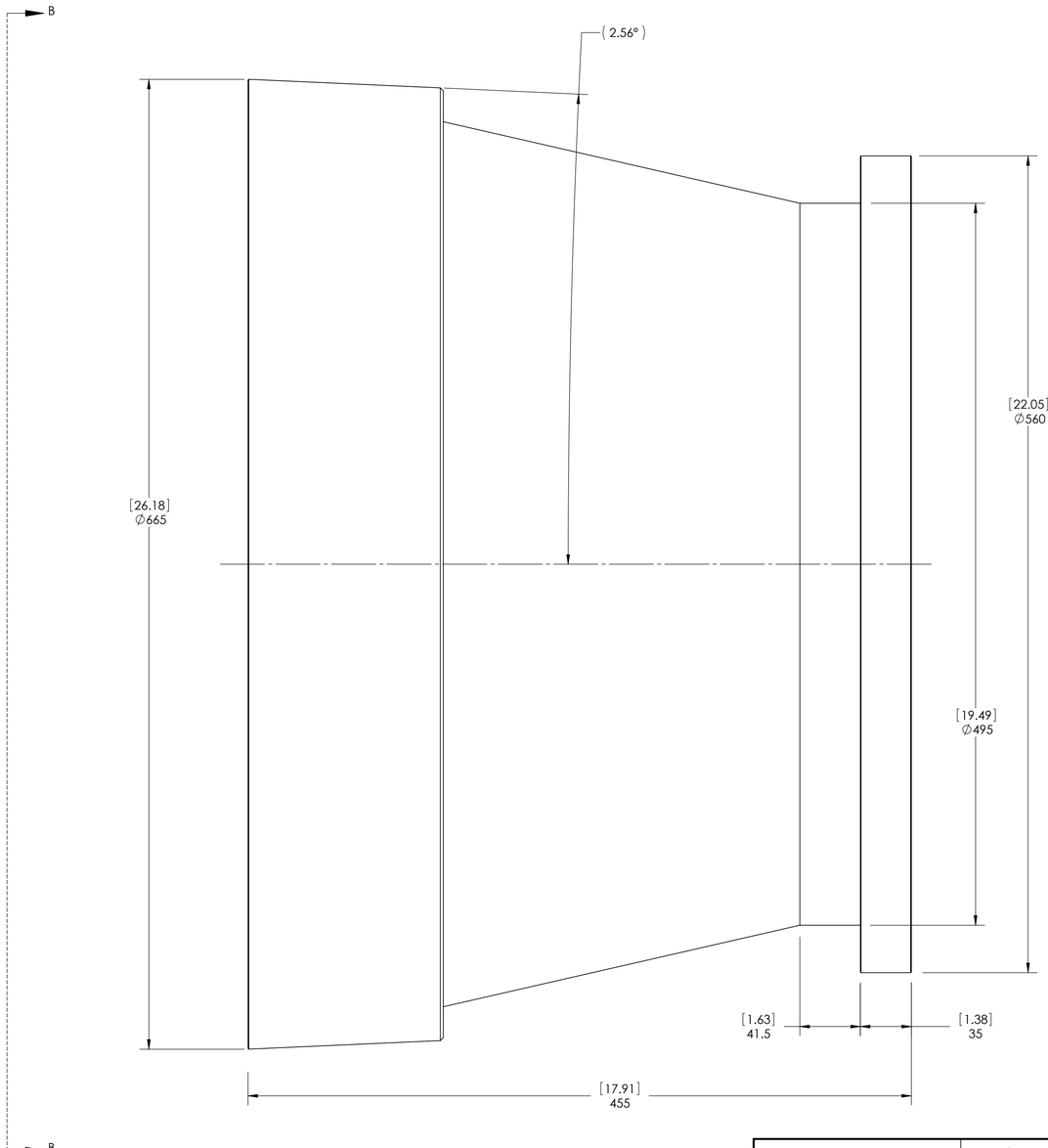

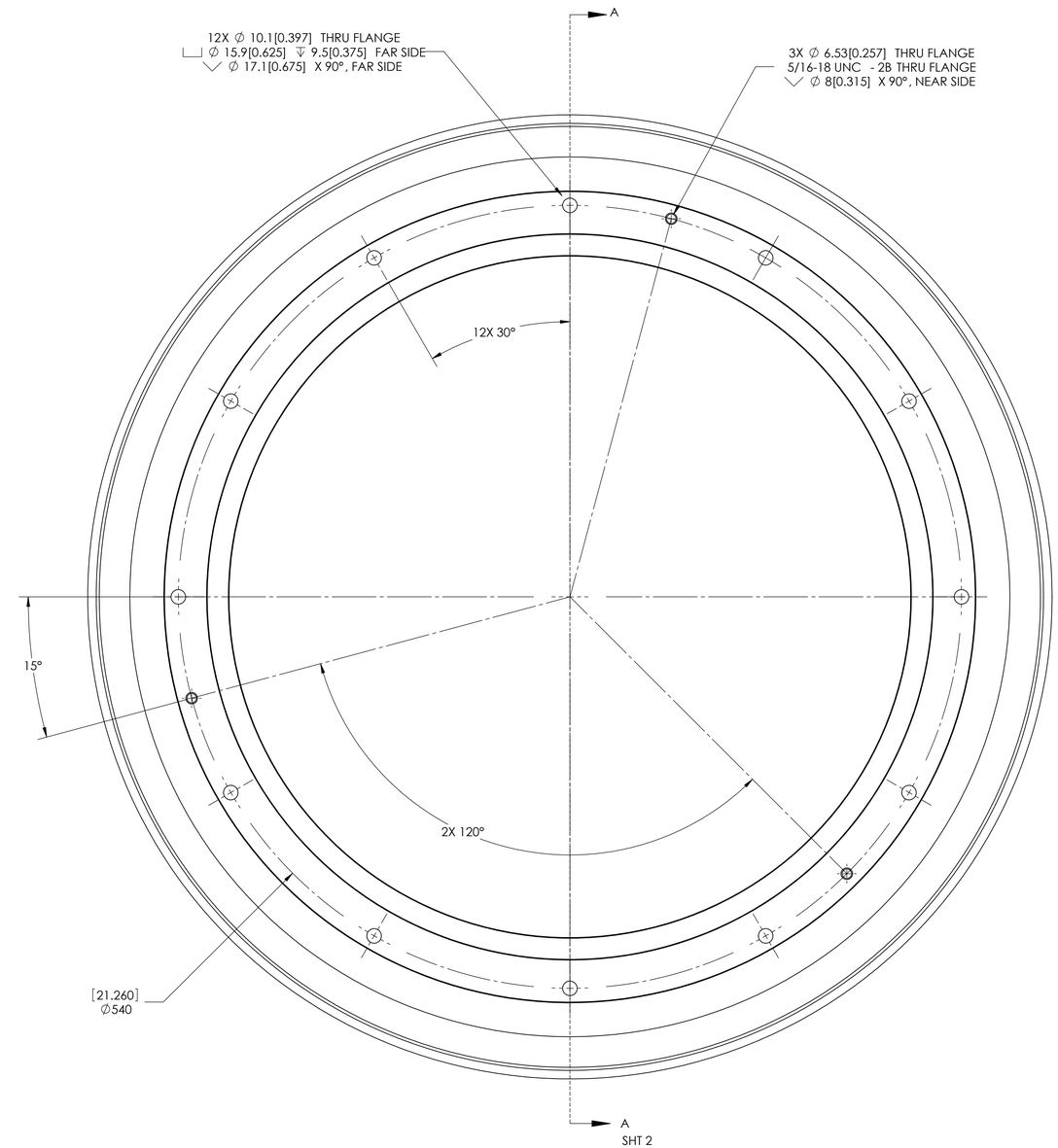

PROPRIETARY RIGHTS are included in all the information disclosed herein. This information is submitted in confidence, and neither this document nor the information disclosed herein shall be reproduced or transferred to any other document, nor shall it be used or disclosed to any person for manufacturing or any other reason except as specifically authorized in writing by C P Systems, Inc.

© 2011 C P Systems, Inc.

THIRD ANGLE PROJECTION

TRIANGULAR FLAG NOTE DENOTES CHANGE FROM PREVIOUS REVISION LEVEL

DO NOT SCALE DRAWING

INTERPRET DRAWING IN ACCORDANCE WITH ASME Y14.5M-1994

NEXT ASSY	USED ON
ASM-100060	KMTNet

UNLESS OTHERWISE NOTED:

ALL DIMENSIONS ARE IN MILLIMETERS AND ARE AFTER APPLIED FINISHES

TOLERANCES:

.X: ± .25 .XXX: ± .05
.XX: ± .13 ANGLES: ± 0°30'

ALL PARTS TO BE FREE OF BURRS AND SHARP EDGES

DRAWN: R. PRICE	DATE: 23 OCT 2011
CHECKED: -	DATE: -
ENGINEERING: -	DATE: -
MANUFACTURING: -	DATE: -
APPROVED: -	DATE:

C P SYSTEMS, INC.
P.O. BOX 780, 20705 E. MARSH STATION RD., VAIL, AZ 85641

TITLE:

LENS NO. 1 CELL HOUSING

SCALE: 1:5	SIZE: D	DRAWING NO.: PRT-100072	REV.: REL-A
SHEET: 1 OF 3			

SIZE: D DRAWING NO: PRT-100072 REV REL-A

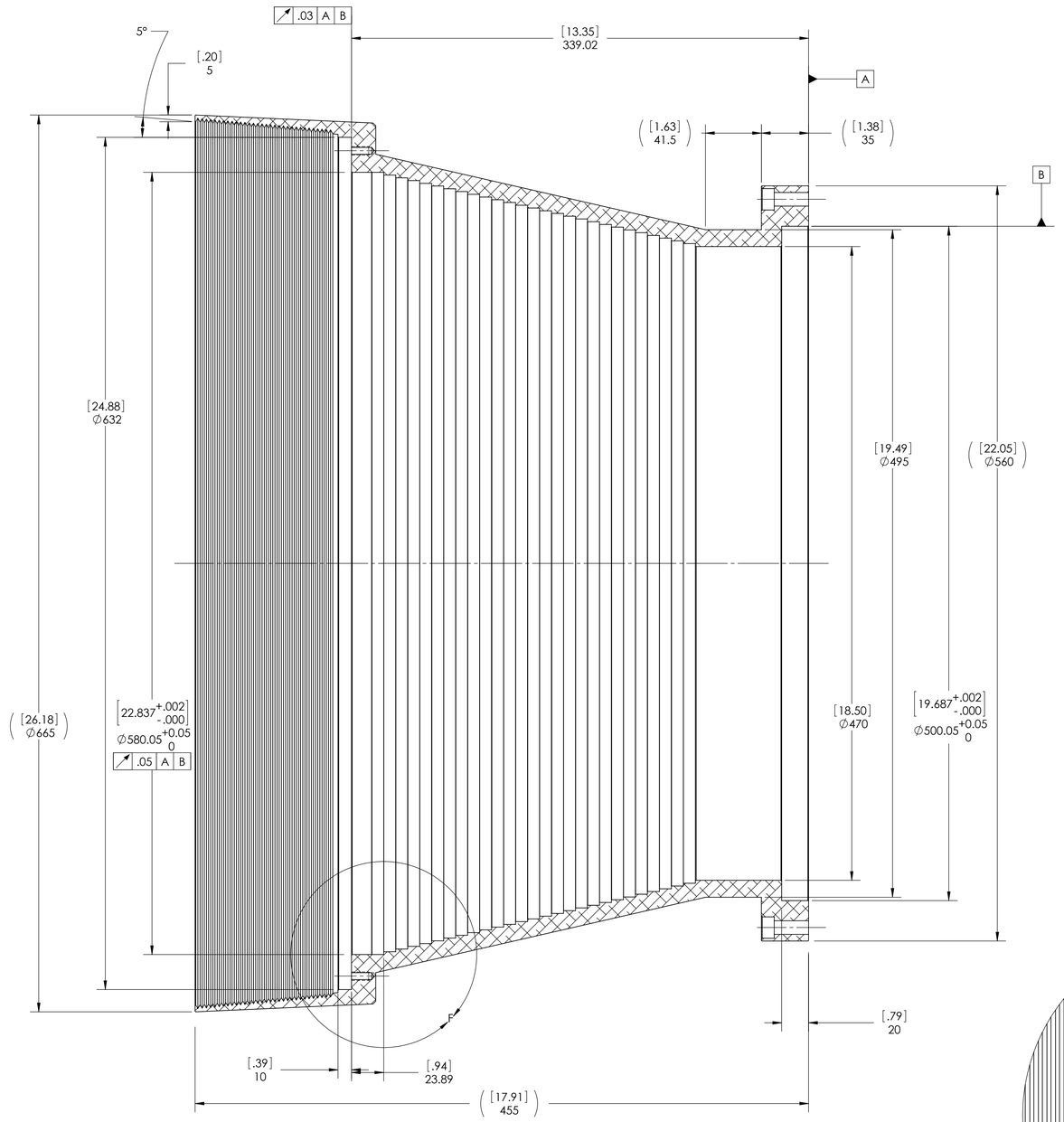

SECTION A-A
SCALE 1 : 2
FROM SHT 1

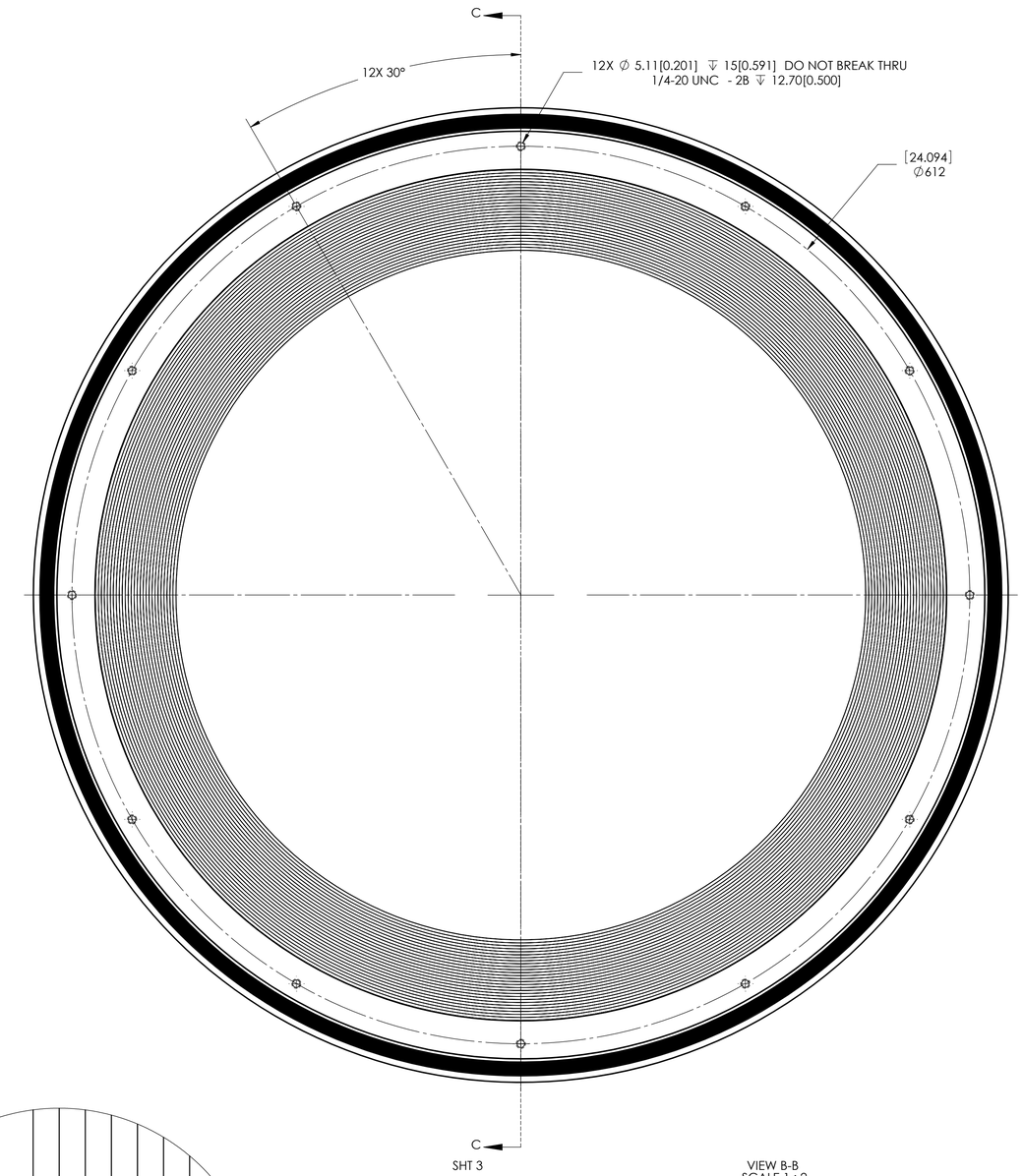

VIEW B-B
SCALE 1 : 2
FROM SHT 1

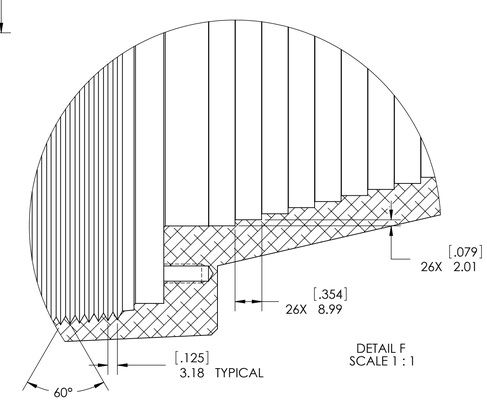

DETAIL F
SCALE 1 : 1

PROPRIETARY RIGHTS are included in all the information disclosed herein. This information is submitted in confidence, and neither this document nor the information disclosed herein shall be reproduced or transferred to any other document, nor shall it be used or disclosed to any person for manufacturing or any other reason except as specifically authorized in writing by C P Systems, Inc.

© 2011 C P Systems, Inc.

C P SYSTEMS, INC.

P.O. BOX 780, 20705 E. MARSH STATION RD., VAIL, AZ 85641

SCALE: 1:5	SIZE: D	DRAWING NO.: PRT-100072	REV.: REL-A
SHEET: 2 OF 3			

REV.: REL-A
SIZE: D DRAWING NO.: PRT-100072

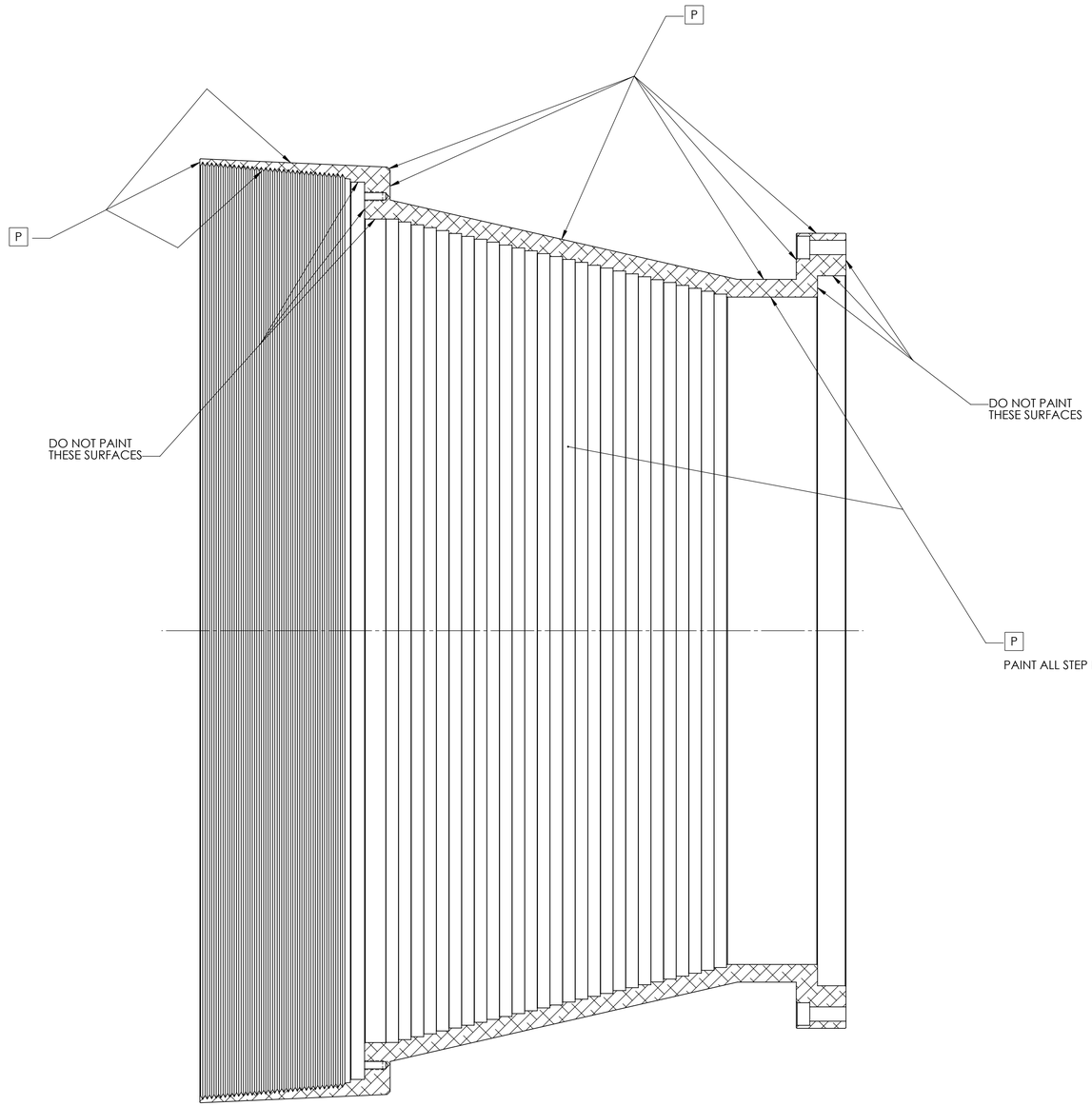

SECTION C-C
SCALE 1 : 2
FROM SHT 2

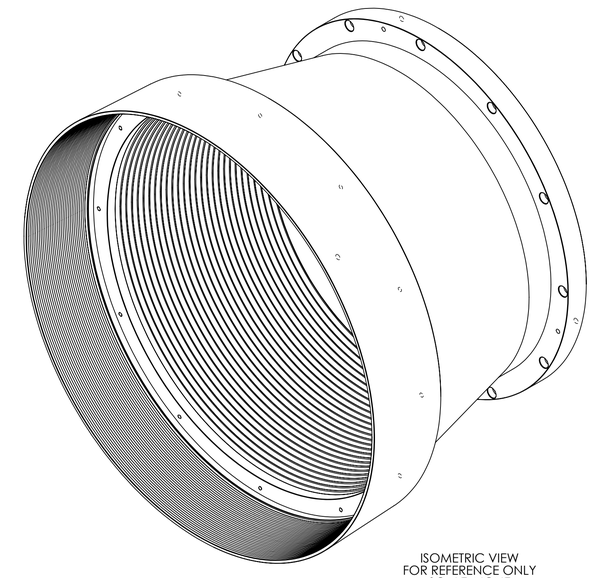

ISOMETRIC VIEW
FOR REFERENCE ONLY
SCALE: NONE

PROPRIETARY RIGHTS are included in all the information disclosed herein. This information is submitted in confidence, and neither this document nor the information disclosed herein shall be reproduced or transferred to any other document, nor shall it be used or disclosed to any person for manufacturing or any other reason except as specifically authorized in writing by C P Systems, Inc.

© 2011 C P Systems, Inc.

C P SYSTEMS, INC.

P.O. BOX 780, 20705 E. MARSH STATION RD., VAIL, AZ 85641

SCALE:	SIZE:	DRAWING NO.:	REV.:
1:5	D	PRT-100072	REL-A
SHEET: 3 OF 3			

REV.: REL-A
SIZE: D DRAWING NO.: PRT-100072

MATERIAL:
6061 Alloy T6
FINISH:
NOTED
WEIGHT:
13281.36 gm

REVISIONS				
ZONE	REV.	DESCRIPTION	DATE	APPROVED

NOTES:

1. ROUGH MACHINE PART TO WITHIN 1.25mm [.050"] OF FINISHED DIMENSIONS. STRESS RELIEVE PRIOR TO FINAL MACHINING.
2. FINISH: ANODIZE PER MIL-A-8625, CLASS II, TYPE 2
   COLOR: BLACK

   PAINT SURFACES MARKED [P] WITH LOW REFLECTION

   FLAT BLACK COATING. REFER TO CPSI DOCUMENT KMTNet TELESCOPE SURFACE FINISHES. MASK ALL HOLES AND THREADED HOLES

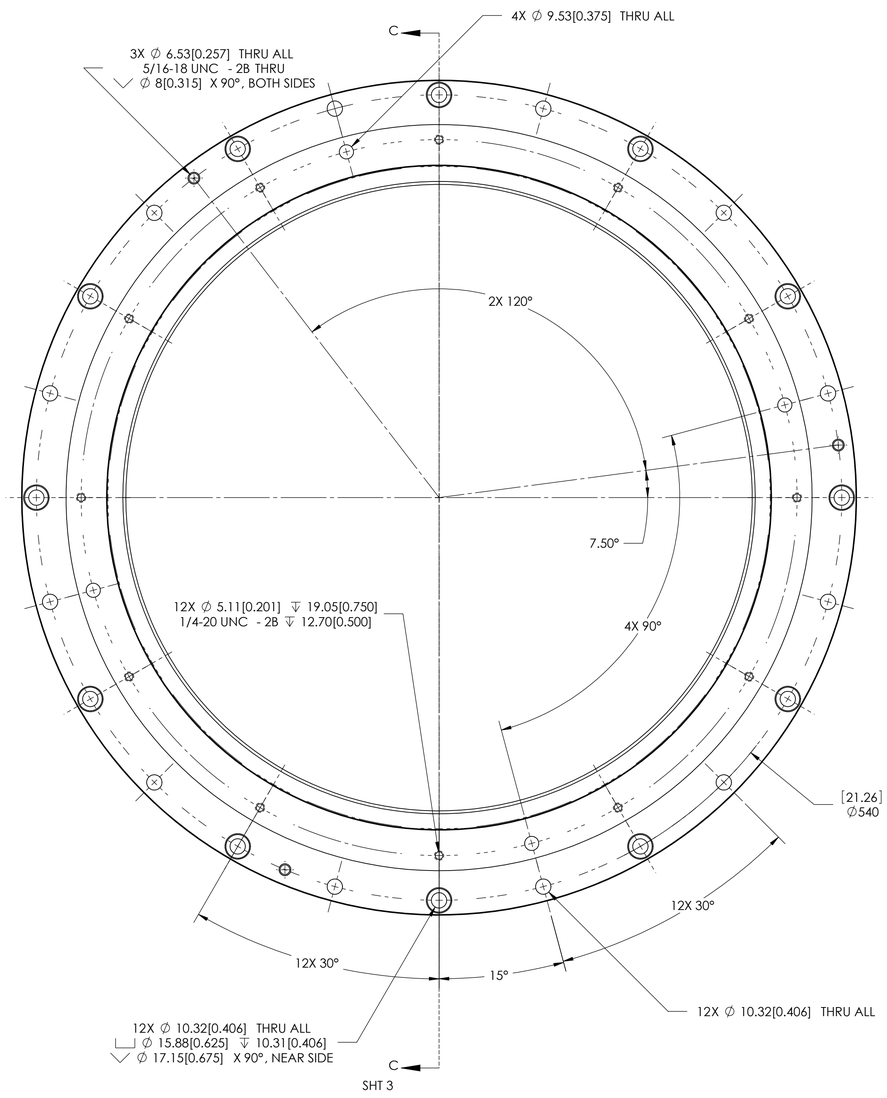

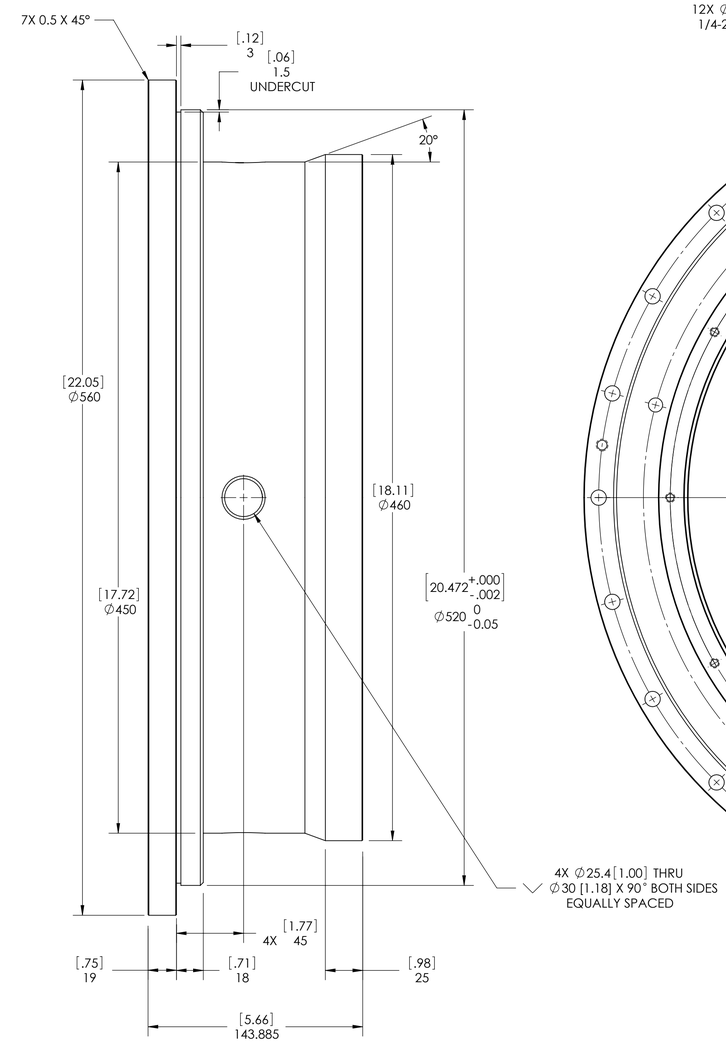

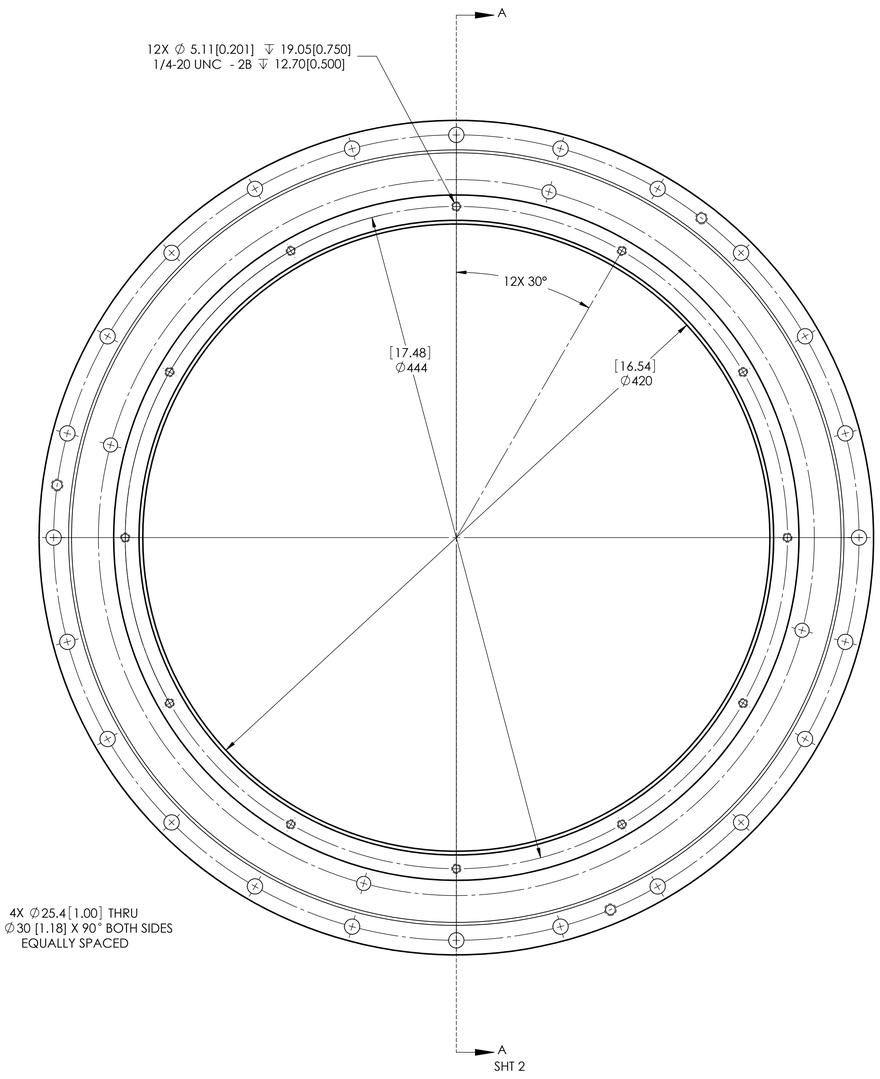

PROPRIETARY RIGHTS are included in all the information disclosed herein. This information is submitted in confidence, and neither this document nor the information disclosed herein shall be reproduced or transferred to any other document, nor shall it be used or disclosed to any person for manufacturing or any other reason except as specifically authorized in writing by C P Systems, Inc.

©2011 C P Systems, Inc.

THIRD ANGLE PROJECTION

TRIANGULAR FLAG NOTE DENOTES CHANGE FROM PREVIOUS REVISION LEVEL

DO NOT SCALE DRAWING

INTERPRET DRAWING IN ACCORDANCE WITH ASME Y14.5M-1994

NEXT ASSY	USED ON
ASM-100060	KMTNet

UNLESS OTHERWISE NOTED:

ALL DIMENSIONS ARE IN MILLIMETERS AND ARE AFTER APPLIED FINISHES

TOLERANCES:

.X: ± .25 .XXX: ± .05
.XX: ± .13 ANGLES: ± 0°30'

ALL PARTS TO BE FREE OF BURRS AND SHARP EDGES

DRAWN: R. PRICE	DATE: 23 OCT 2011		
CHECKED: -	DATE: -		
ENGINEERING: -	DATE: -		
MANUFACTURING: -	DATE: -		
APPROVED: -	DATE:		

C P SYSTEMS, INC.
P.O. BOX 780, 20705 E. MARSH STATION RD., VAIL, AZ 85641

TITLE:

LENS NO. 2 & 3 HOUSING

SCALE: 1:5	SIZE: D	DRAWING NO.: PRT-100073	REV.: REL-A
SHEET: 1 OF 3			

SIZE: D DRAWING NO.: PRT-100073 REV: REL-A

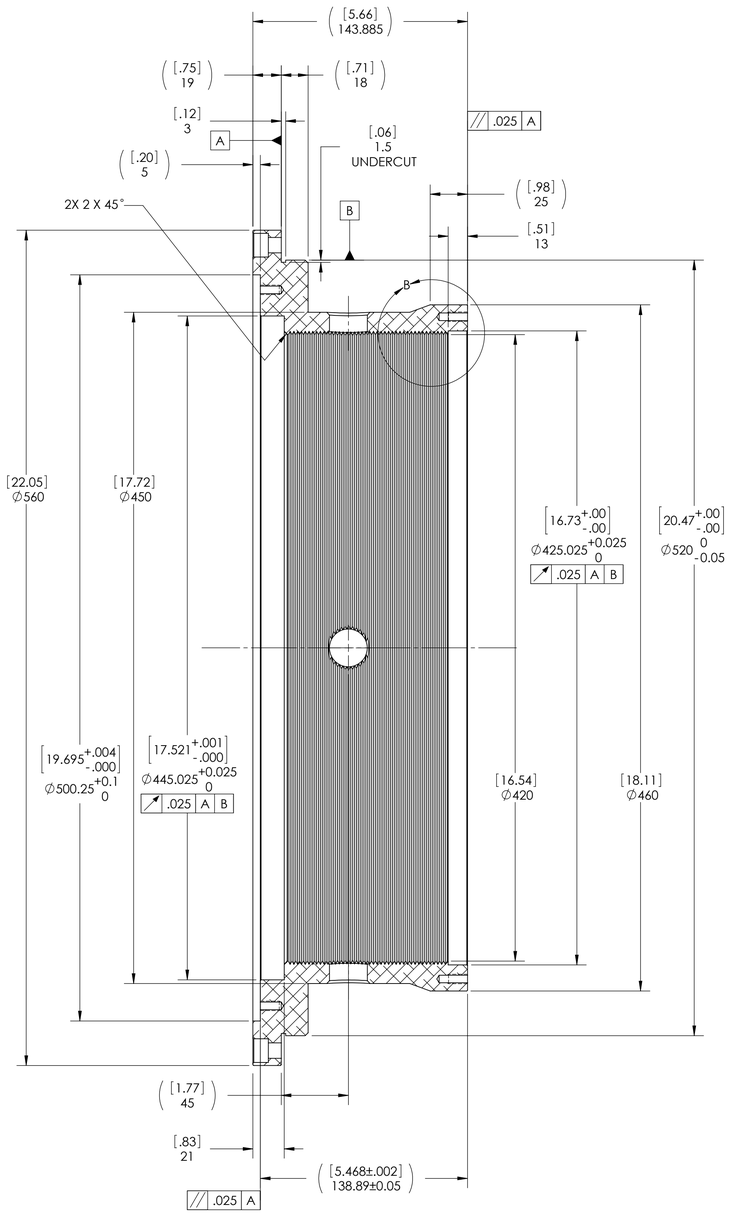

SECTION A-A
SCALE 1 : 2
FROM SHT 1

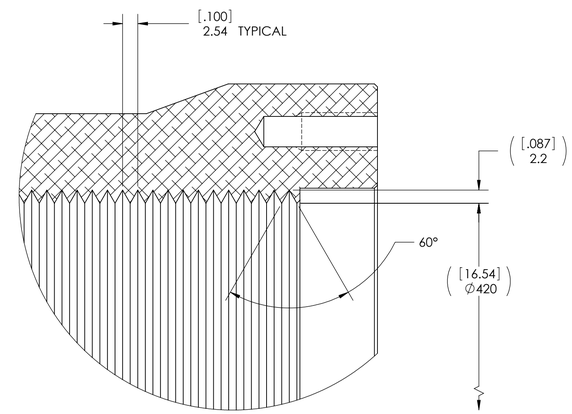

DETAIL B
SCALE 2 : 1

CONVOLUTION DETAIL

PROPRIETARY RIGHTS are included in all the information disclosed herein. This information is submitted in confidence, and neither this document nor the information disclosed herein shall be reproduced or transferred to any other document, nor shall it be used or disclosed to any person for manufacturing or any other reason except as specifically authorized in writing by C P Systems, Inc.

© 2011 C P Systems, Inc.

C P SYSTEMS, INC.

P.O. BOX 780, 20705 E. MARSH STATION RD., VAIL, AZ 85641

SCALE: 1:5	SIZE: D	DRAWING NO.: PRT-100073	REV.: REL-A
SHEET: 2 OF 3			

REV.: REL-A
SIZE: D DRAWING NO.: PRT-100073

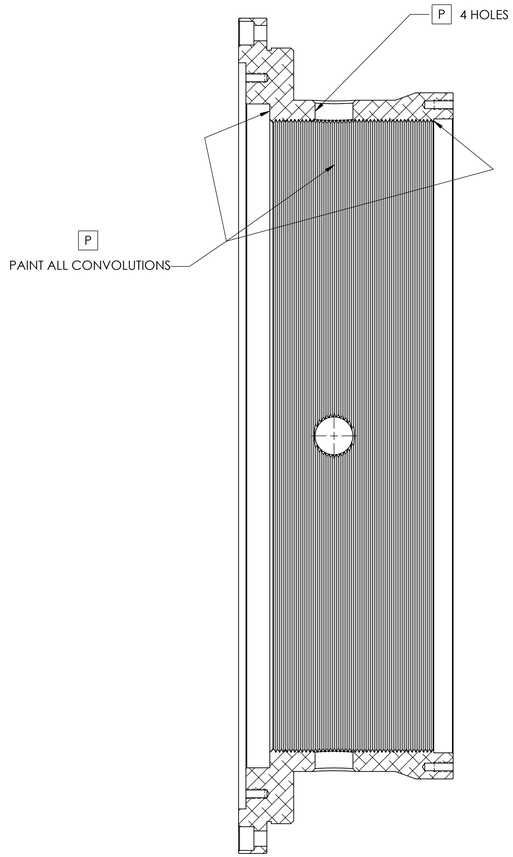

SECTION C-C
SCALE 1 : 2
FROM SHT 1

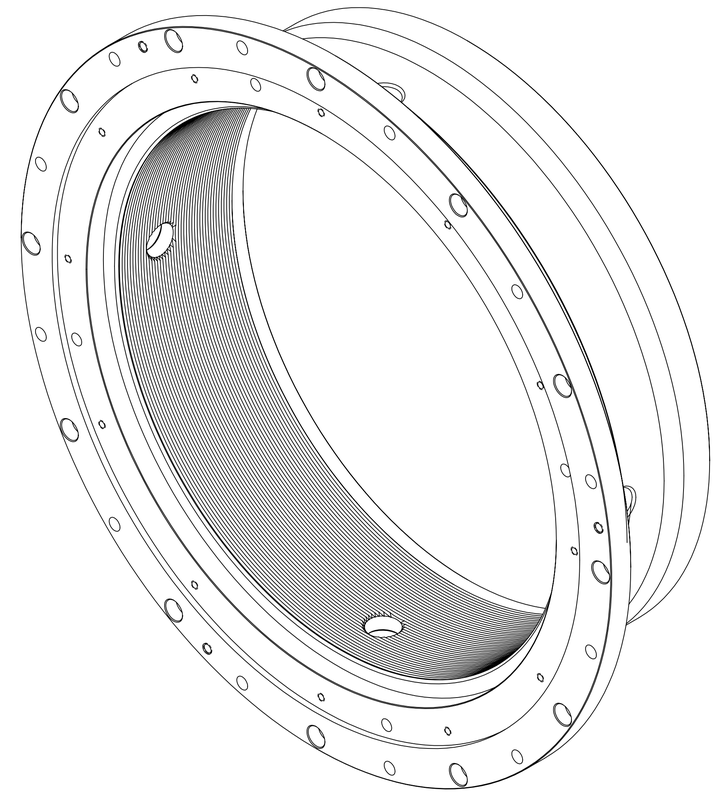

ISOMETRIC VIEW
FOR REFERENCE ONLY
SCALE: NONE

PROPRIETARY RIGHTS are included in all the information disclosed herein. This information is submitted in confidence, and neither this document nor the information disclosed herein shall be reproduced or transferred to any other document, nor shall it be used or disclosed to any person for manufacturing or any other reason except as specifically authorized in writing by C P Systems, Inc.

© 2011 C P Systems, Inc.

C P SYSTEMS, INC.

P.O. BOX 780, 20705 E. MARSH STATION RD., VAIL, AZ 85641

SCALE: 1:5	SIZE: D	DRAWING NO.: PRT-100073	REV.: REL-A
SHEET: 3 OF 3			

REV.: REL-A
SIZE: D DRAWING NO.: PRT-100073

MATERIAL:
AISI 304 / 303
FINISH:
NOTED
WEIGHT:
8304.74 gm

REVISIONS				
ZONE	REV.	DESCRIPTION	DATE	APPROVED

NOTES:

1. PASSIVATE PER ASTM 967-96
2. PAINT SURFACES MARKED [P] WITH

   LOW REFLECTION FLAT BLACK COATING.
   REFER TO CPSI DOCUMENT KMTNet
   TELESCOPE SURFACE FINISHES.
   MASK ALL HOLES AND THREADED
   HOLES.

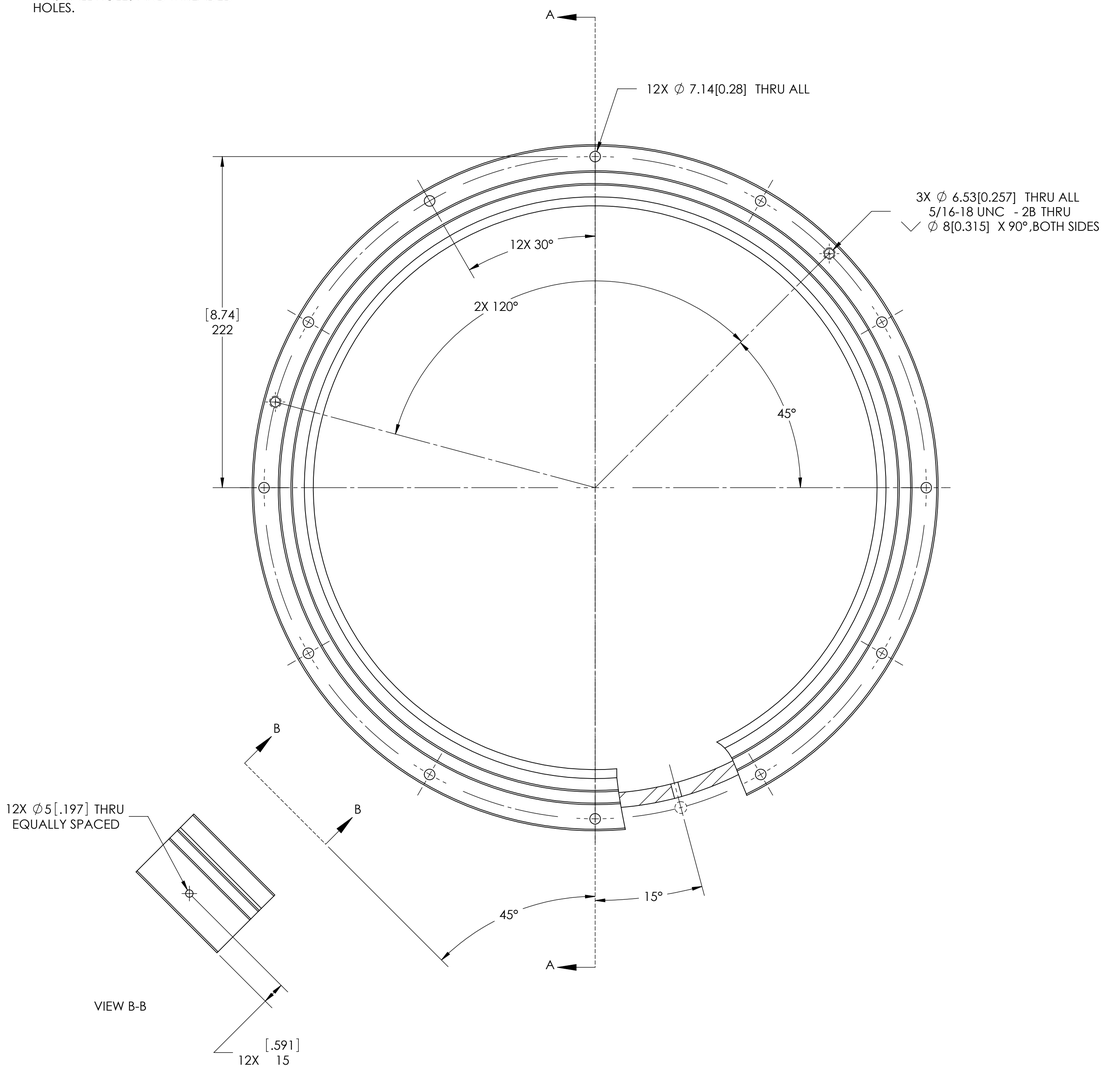

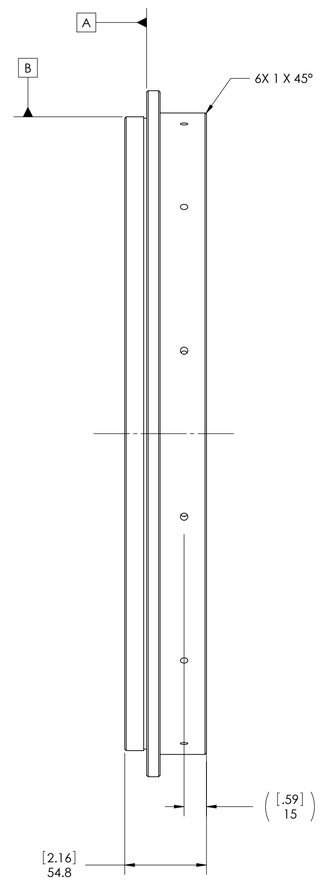

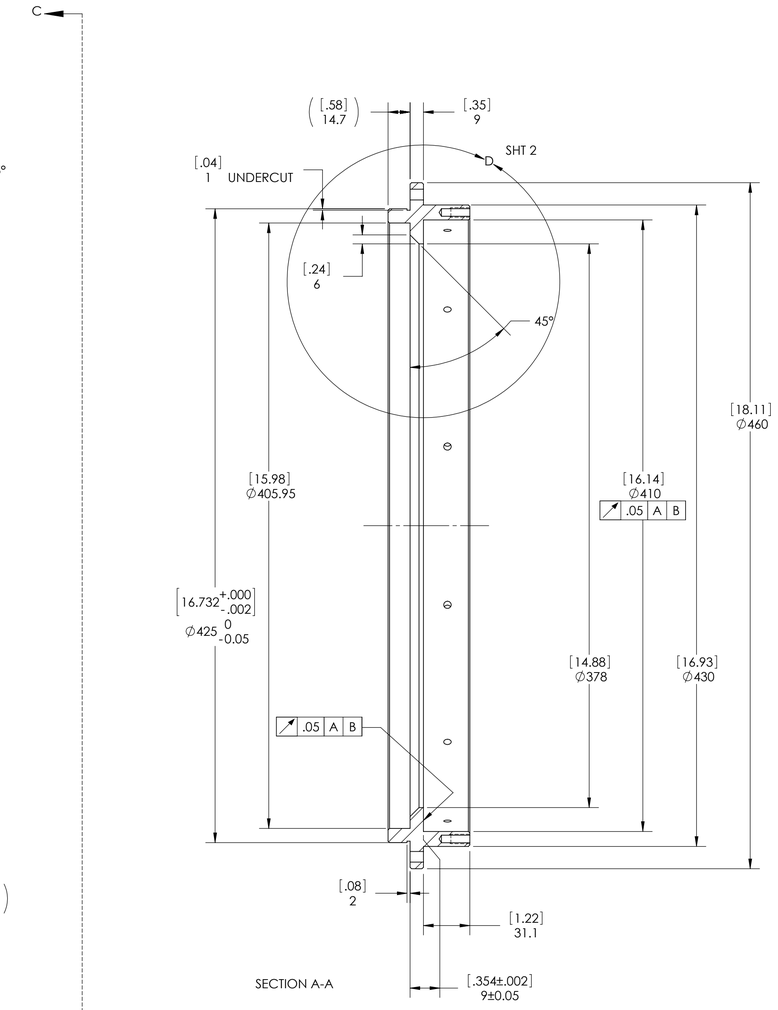

PROPRIETARY RIGHTS are included in all the information disclosed herein. This information is submitted in confidence, and neither this document nor the information disclosed herein shall be reproduced or transferred to any other document, nor shall it be used or disclosed to any person for manufacturing or any other reason except as specifically authorized in writing by C P Systems, Inc.

© 2011 C P Systems, Inc.

THIRD ANGLE PROJECTION

TRIANGULAR FLAG NOTE DENOTES CHANGE FROM PREVIOUS REVISION LEVEL

DO NOT SCALE DRAWING

INTERPRET DRAWING IN ACCORDANCE WITH ASME Y14.5M-1994

NEXT ASSY	USED ON
ASM-100109	KMTNet

UNLESS OTHERWISE NOTED:

ALL DIMENSIONS ARE IN MILLIMETERS AND ARE AFTER APPLIED FINISHES

TOLERANCES:

.X: ± .25 .XXX: ± .05
.XX: ± .13 ANGLES: ± 0°30'

ALL PARTS TO BE FREE OF BURRS AND SHARP EDGES

DRAWN: R. PRICE	DATE: 08 OCT 2011		
CHECKED: -	DATE: -		
ENGINEERING: -	DATE: -		
MANUFACTURING: -	DATE: -		
APPROVED: -	DATE:		

C P SYSTEMS, INC.
P.O. BOX 780, 20705 E. MARSH STATION RD., VAIL, AZ 85641

TITLE:

LENS NO. 3 CELL

SCALE: 1:2	SIZE: D	DRAWING NO.: PRT-100074	REV.: REL-A
SHEET: 1 OF 2			

SIZE: D DRAWING NO.: PRT-100074 REV REL-A

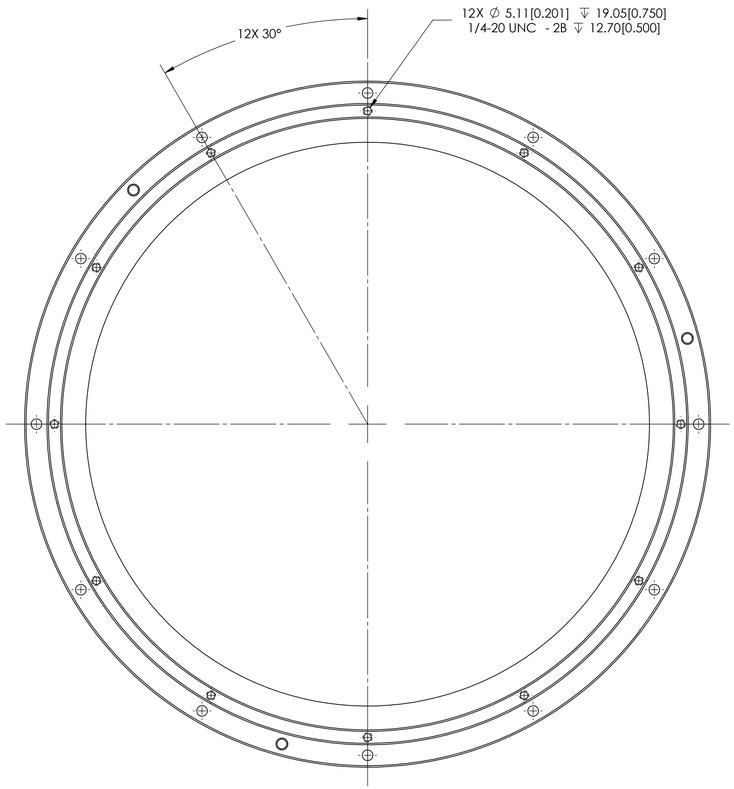

VIEW C-C
FROM SHT 1

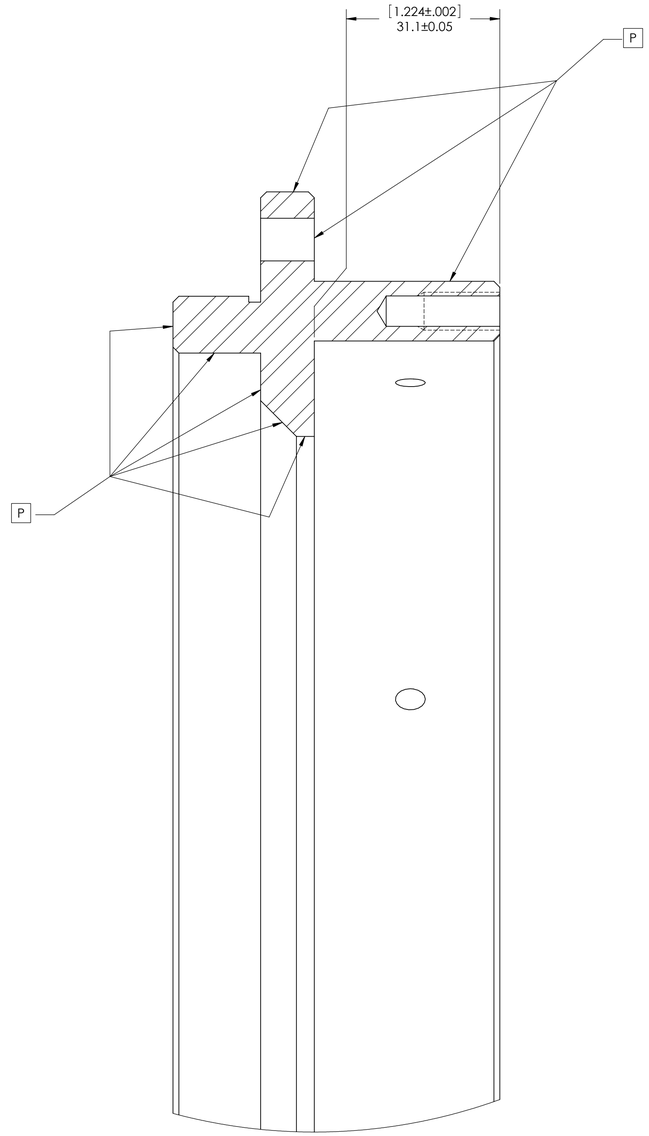

DETAIL D
SCALE 2 : 1

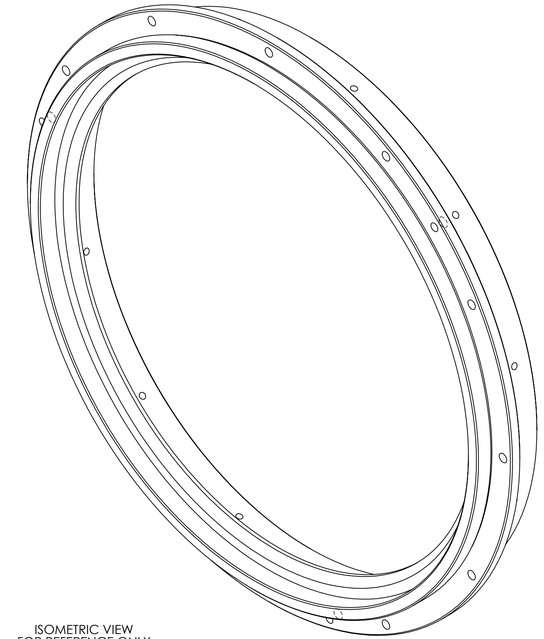

ISOMETRIC VIEW
FOR REFERENCE ONLY
SCALE: NONE

PROPRIETARY RIGHTS are included in all the information disclosed herein. This information is submitted in confidence, and neither this document nor the information disclosed herein shall be reproduced or transferred to any other document, nor shall it be used or disclosed to any person for manufacturing or any other reason except as specifically authorized in writing by C P Systems, Inc.

© 2011 C P Systems, Inc.

C P SYSTEMS, INC.

P.O. BOX 780, 20705 E. MARSH STATION RD., VAIL, AZ 85641

SCALE: 1:2	SIZE: D	DRAWING NO.: PRT-100074	REV.: REL-A
SHEET: 2 OF 2			

REV.: REL-A
SIZE: D DRAWING NO.: PRT-100074

MATERIAL:
ASTM A36 Steel
FINISH:
NOTED
WEIGHT:
5846.87 gm

REVISIONS				
ZONE	REV.	DESCRIPTION	DATE	APPROVED

NOTES:

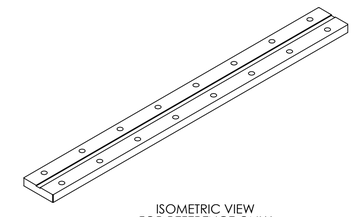

ISOMETRIC VIEW
FOR REFERENCE ONLY
SCALE: NONE

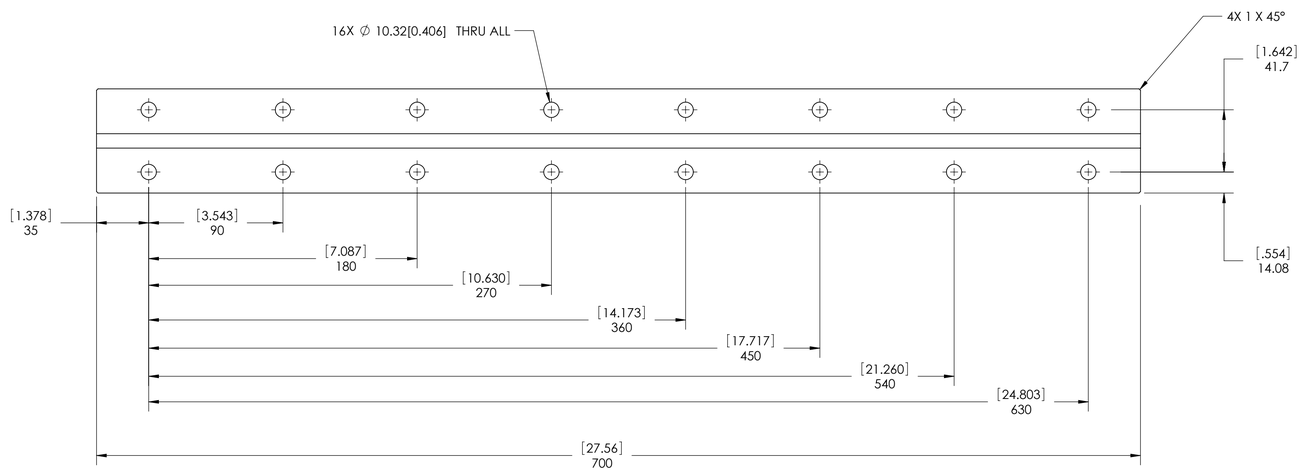

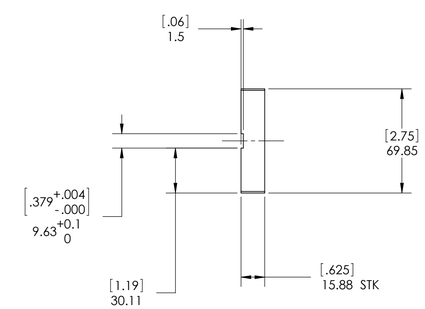

PROPRIETARY RIGHTS are included in all the information disclosed herein. This information is submitted in confidence, and neither this document nor the information disclosed herein shall be reproduced or transferred to any other document, nor shall it be used or disclosed to any person for manufacturing or any other reason except as specifically authorized in writing by C P Systems, Inc.

© 2011 C P Systems, Inc.

THIRD ANGLE PROJECTION

TRIANGULAR FLAG NOTE DENOTES CHANGE FROM PREVIOUS REVISION LEVEL

DO NOT SCALE DRAWING

INTERPRET DRAWING IN ACCORDANCE WITH ASME Y14.5M-1994

NEXT ASSY	USED ON
ASM-100077	KMTNet

UNLESS OTHERWISE NOTED:

ALL DIMENSIONS ARE IN MILLIMETERS AND ARE AFTER APPLIED FINISHES

TOLERANCES:

.X: ± .25 .XXX: ± .05
.XX: ± .13 ANGLES: ± 0°30'

ALL PARTS TO BE FREE OF BURRS AND SHARP EDGES

DRAWN: R. PRICE	DATE: 27 SEPT 2011		
CHECKED: -	DATE: -		
ENGINEERING: -	DATE: -		
MANUFACTURING: -	DATE: -		
APPROVED: -	DATE:		

C P SYSTEMS, INC.

P.O. BOX 780, 20705 E. MARSH STATION RD., VAIL, AZ 85641

TITLE: BASE, SPIDER VANE

SCALE: 1:5	SIZE: D	DRAWING NO.: PRT-100075	REV.: REL-A
SHEET: 1 OF 1			

REV REL-A

SIZE: D DRAWING NO: PRT-100075

MATERIAL:
ASTM A36 Steel
FINISH:
NOTED
WEIGHT:
11417.02 gm

REVISIONS				
ZONE	REV.	DESCRIPTION	DATE	APPROVED

NOTES:

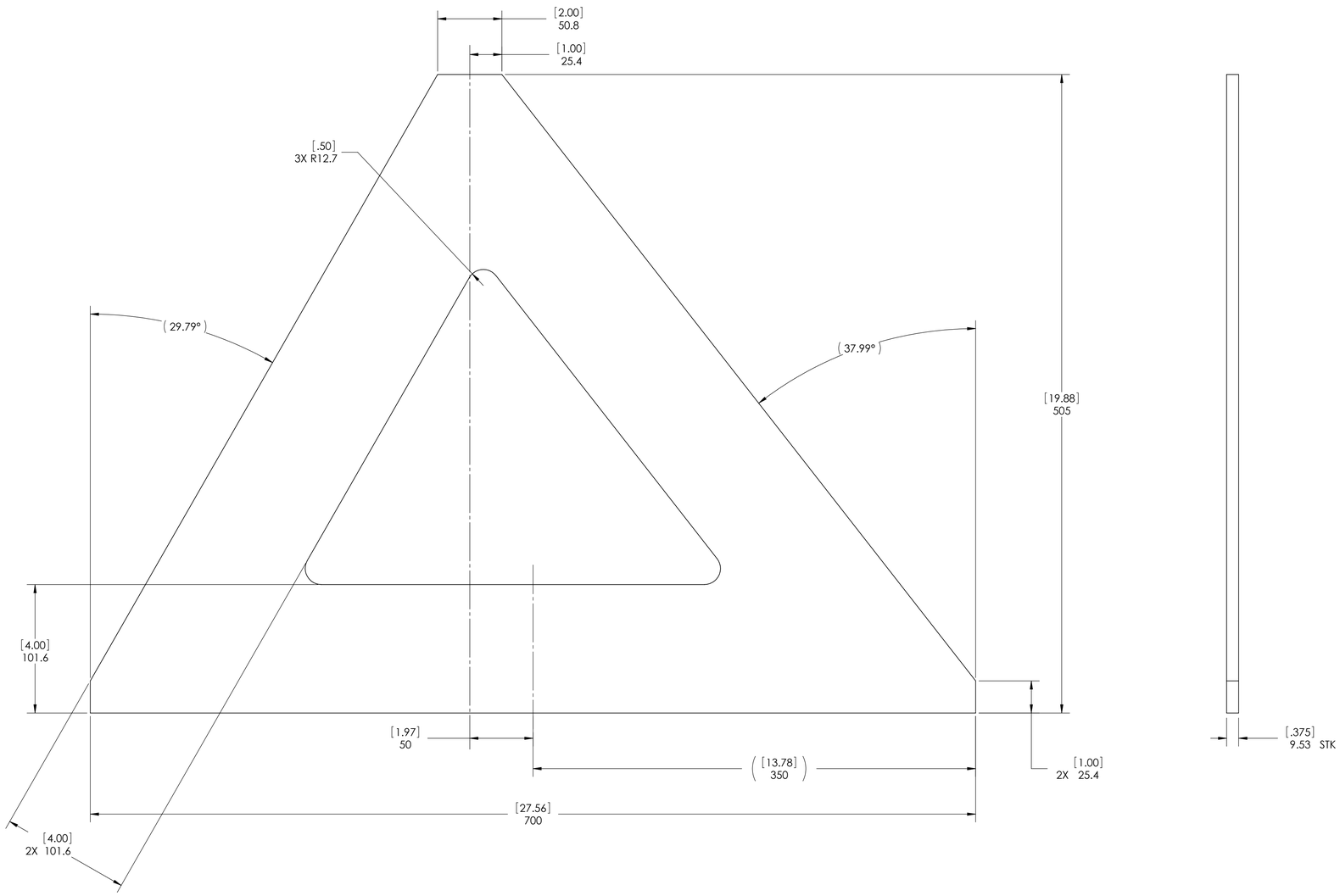

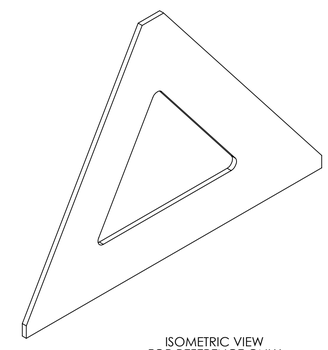

ISOMETRIC VIEW
FOR REFERENCE ONLY
SCALE: NONE

PROPRIETARY RIGHTS are included in all the information disclosed herein. This information is submitted in confidence, and neither this document nor the information disclosed herein shall be reproduced or transferred to any other document, nor shall it be used or disclosed to any person for manufacturing or any other reason except as specifically authorized in writing by C P Systems, Inc.

© 2011 C P Systems, Inc.

THIRD ANGLE PROJECTION

TRIANGULAR FLAG NOTE DENOTES CHANGE FROM PREVIOUS REVISION LEVEL

DO NOT SCALE DRAWING

INTERPRET DRAWING IN ACCORDANCE WITH ASME Y14.5M-1994

NEXT ASSY	USED ON
ASM-100077	KMTNet

UNLESS OTHERWISE NOTED:

ALL DIMENSIONS ARE IN MILLIMETERS AND ARE AFTER APPLIED FINISHES

TOLERANCES:

.X: ± .25 .XXX: ± .05
.XX: ± .13 ANGLES: ± 0°30'

ALL PARTS TO BE FREE OF BURRS AND SHARP EDGES

DRAWN: R. PRICE	DATE: 27 SEPT 2011		
CHECKED: -	DATE: -		
ENGINEERING: -	DATE: -		
MANUFACTURING: -	DATE: -		
APPROVED: -	DATE:		

C P SYSTEMS, INC.
P.O. BOX 780, 20705 E. MARSH STATION RD., VAIL, AZ 85641

TITLE: SPIDER VANE

SCALE: 1:5	SIZE: D	DRAWING NO.: PRT-100076	REV.: REL-A
SHEET: 1 OF 1			

SIZE: D DRAWING NO.: PRT-100076 REV: REL-A

MATERIAL:
ASTM A36 Steel
FINISH:
NOTED
WEIGHT:
402.38 gm

REVISIONS				
ZONE	REV.	DESCRIPTION	DATE	APPROVED

NOTES:

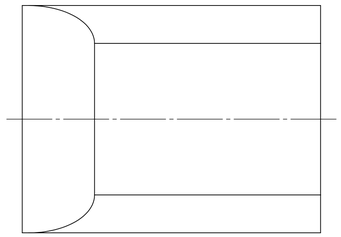

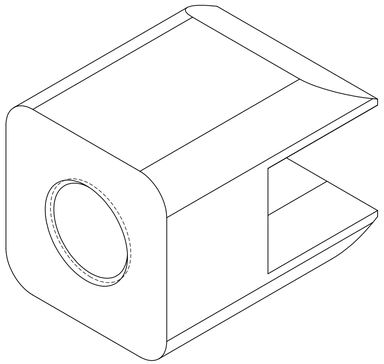

ISOMETRIC VIEW
FOR REFERENCE ONLY
SCALE: NONE

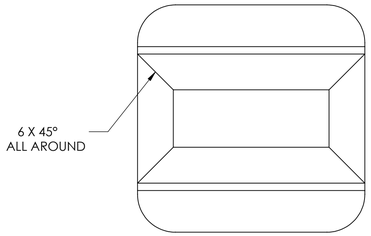

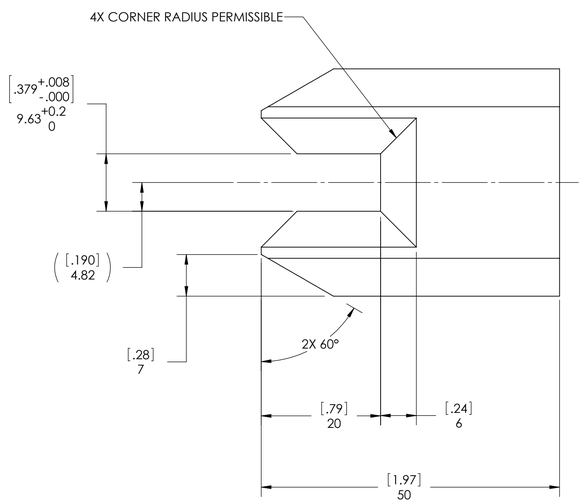

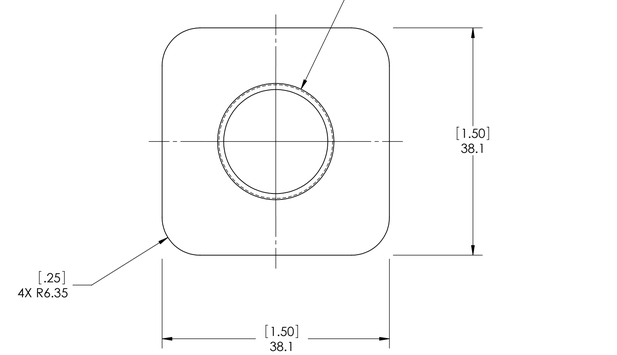

PROPRIETARY RIGHTS are included in all the information disclosed herein. This information is submitted in confidence, and neither this document nor the information disclosed herein shall be reproduced or transferred to any other document, nor shall it be used or disclosed to any person for manufacturing or any other reason except as specifically authorized in writing by C P Systems, Inc.

© 2011 C P Systems, Inc.

THIRD ANGLE PROJECTION

TRIANGULAR FLAG NOTE DENOTES CHANGE FROM PREVIOUS REVISION LEVEL

DO NOT SCALE DRAWING

INTERPRET DRAWING IN ACCORDANCE WITH ASME Y14.5M-1994

NEXT ASSY	USED ON
ASM-100077	KMTNet

UNLESS OTHERWISE NOTED:

ALL DIMENSIONS ARE IN MILLIMETERS AND ARE AFTER APPLIED FINISHES

TOLERANCES:

.X: ± .25 .XXX: ± .05
.XX: ± .13 ANGLES: ± 0°30'

ALL PARTS TO BE FREE OF BURRS AND SHARP EDGES

DRAWN: R. PRICE	DATE: 27 SEPT 2011		
CHECKED: -	DATE: -		
ENGINEERING: -	DATE: -		
MANUFACTURING: -	DATE: -		
APPROVED: -	DATE:		

C P SYSTEMS, INC.
P.O. BOX 780, 20705 E. MARSH STATION RD., VAIL, AZ 85641

TITLE:

SPIDER VANE OUTER BLOCK

SCALE: 2:1	SIZE: D	DRAWING NO.: PRT-100079	REV.: REL-A
SHEET: 1 OF 1			

REV REL-A
SIZE: D DRAWING NO.: PRT-100079

MATERIAL:
17-4 PH CRES COND H900
FINISH:
NOTED
WEIGHT:
137.07 gm

REVISIONS				
ZONE	REV.	DESCRIPTION	DATE	APPROVED

NOTES:

1. PASSIVATE PER ASTM A 967-96
2. MATING PART IS PRT-100110

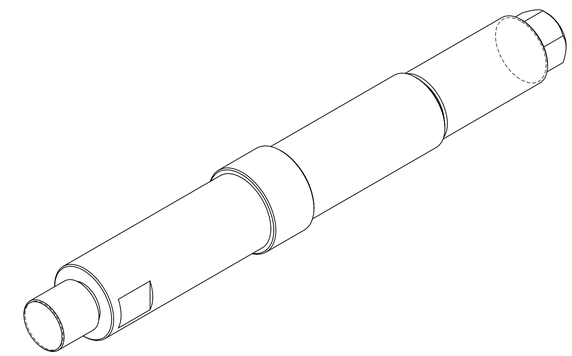

ISOMETRIC VIEW
FOR REFERENCE ONLY
SCALE: NONE

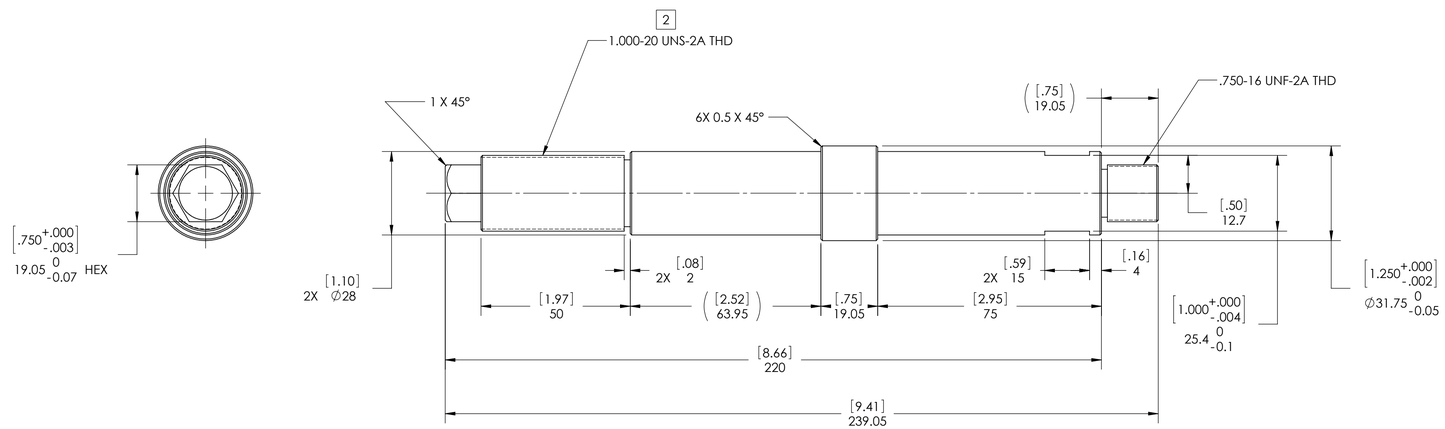

PROPRIETARY RIGHTS are included in all the information disclosed herein. This information is submitted in confidence, and neither this document nor the information disclosed herein shall be reproduced or transferred to any other document, nor shall it be used or disclosed to any person for manufacturing or any other reason except as specifically authorized in writing by C P Systems, Inc.

© 2011 C P Systems, Inc.

THIRD ANGLE PROJECTION

TRIANGULAR FLAG NOTE DENOTES CHANGE FROM PREVIOUS REVISION LEVEL

DO NOT SCALE DRAWING

INTERPRET DRAWING IN ACCORDANCE WITH ASME Y14.5M-1994

NEXT ASSY	USED ON
ASM-100146	KMTNet

UNLESS OTHERWISE NOTED:

ALL DIMENSIONS ARE IN MILLIMETERS AND ARE AFTER APPLIED FINISHES

TOLERANCES:

.X: ± .25 .XXX: ± .05
.XX: ± .13 ANGLES: ± 0°30'

ALL PARTS TO BE FREE OF BURRS AND SHARP EDGES

DRAWN: R. PRICE	DATE: 02 OCT 2011		
CHECKED: -	DATE: -		
ENGINEERING: -	DATE: -		
MANUFACTURING: -	DATE: -		
APPROVED: -	DATE:		

C P SYSTEMS, INC.

P.O. BOX 780, 20705 E. MARSH STATION RD., VAIL, AZ 85641

TITLE: SPIDER ATTACHMENT SHAFT

SCALE: 1:1	SIZE: D	DRAWING NO.: PRT-100080	REV.: REL-A
SHEET: 1 OF 1			

REV REL-A
SIZE: D DRAWING NO: PRT-100080

MATERIAL:
6061 Alloy T6
FINISH:
NOTED
WEIGHT:
674.61 gm

REVISIONS				
ZONE	REV.	DESCRIPTION	DATE	APPROVED

NOTES:

1. MATERIAL: 6061-T6 ALUMINUM ANGLE, 1.50" X .25" THK
2. FINISH: CHEM FILM PER MIL-C-5541-E
   PAINT ALL SURFACES EXCEPT THOSE MARKED M WITH LOW REFLECTION FLAT BLACK COATING. REFER TO CPSI DOCUMENT KMTNet TELESCOPE SURFACE FINISHES. MASK ALL HOLES AND THREADED HOLES PRIOR TO PAINTING.

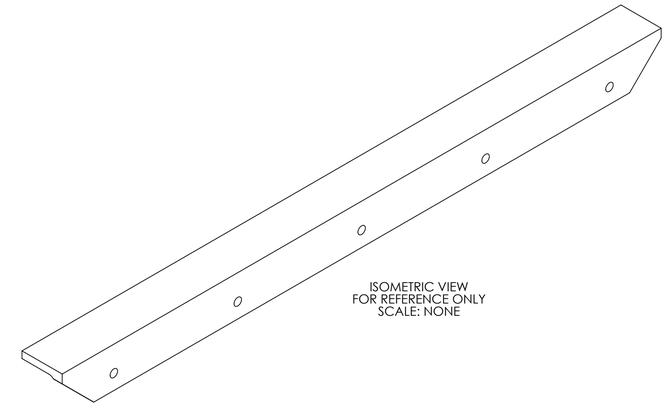

ISOMETRIC VIEW
FOR REFERENCE ONLY
SCALE: NONE

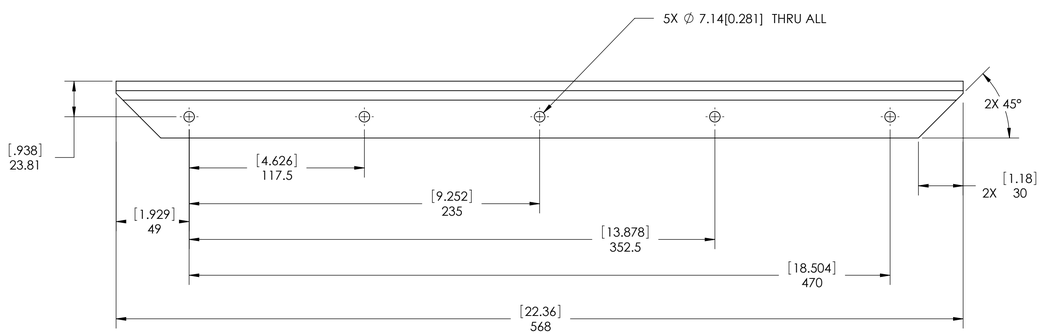

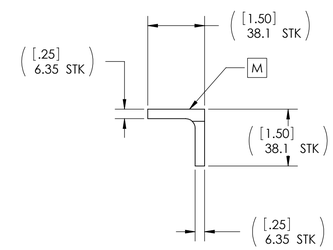

PROPRIETARY RIGHTS are included in all the information disclosed herein. This information is submitted in confidence, and neither this document nor the information disclosed herein shall be reproduced or transferred to any other document, nor shall it be used or disclosed to any person for manufacturing or any other reason except as specifically authorized in writing by C P Systems, Inc.

© 2011 C P Systems, Inc.

THIRD ANGLE PROJECTION

TRIANGULAR FLAG NOTE DENOTES CHANGE FROM PREVIOUS REVISION LEVEL

DO NOT SCALE DRAWING

INTERPRET DRAWING IN ACCORDANCE WITH ASME Y14.5M-1994

NEXT ASSY	USED ON
ASM-100090	KMTNet

UNLESS OTHERWISE NOTED:

ALL DIMENSIONS ARE IN MILLIMETERS AND ARE AFTER APPLIED FINISHES

TOLERANCES:

.X: ± .25 .XXX: ± .05
.XX: ± .13 ANGLES: ± 0°30'

ALL PARTS TO BE FREE OF BURRS AND SHARP EDGES

DRAWN: R. PRICE	DATE: 17 OCT 2011		
CHECKED: -	DATE: -		
ENGINEERING: -	DATE: -		
MANUFACTURING: -	DATE: -		
APPROVED: -	DATE:		

C P SYSTEMS, INC.
P.O. BOX 780, 20705 E. MARSH STATION RD., VAIL, AZ 85641

TITLE:
FILTER/SHUTTER SUPPORT RAIL

SCALE: 1:2	SIZE: D	DRAWING NO.: PRT-100081	REV.: REL-A
SHEET: 1 OF 1			

REV REL-A
SIZE: D DRAWING NO.: PRT-100081

MATERIAL:
AISI 304 / 303
FINISH:
NOTED
WEIGHT:
15965.19 gm

REVISIONS				
ZONE	REV.	DESCRIPTION	DATE	APPROVED

NOTES:

1. PASSIVATE PER ASTM 967-96
2. PAINT SURFACES MARKED P WITH

   LOW REFLECTION FLAT BLACK COATING.
   REFER TO CPSI DOCUMENT KMTNet
   TELESCOPE SURFACE FINISHES.
   MASK ALL HOLES AND THREADED
   HOLES.

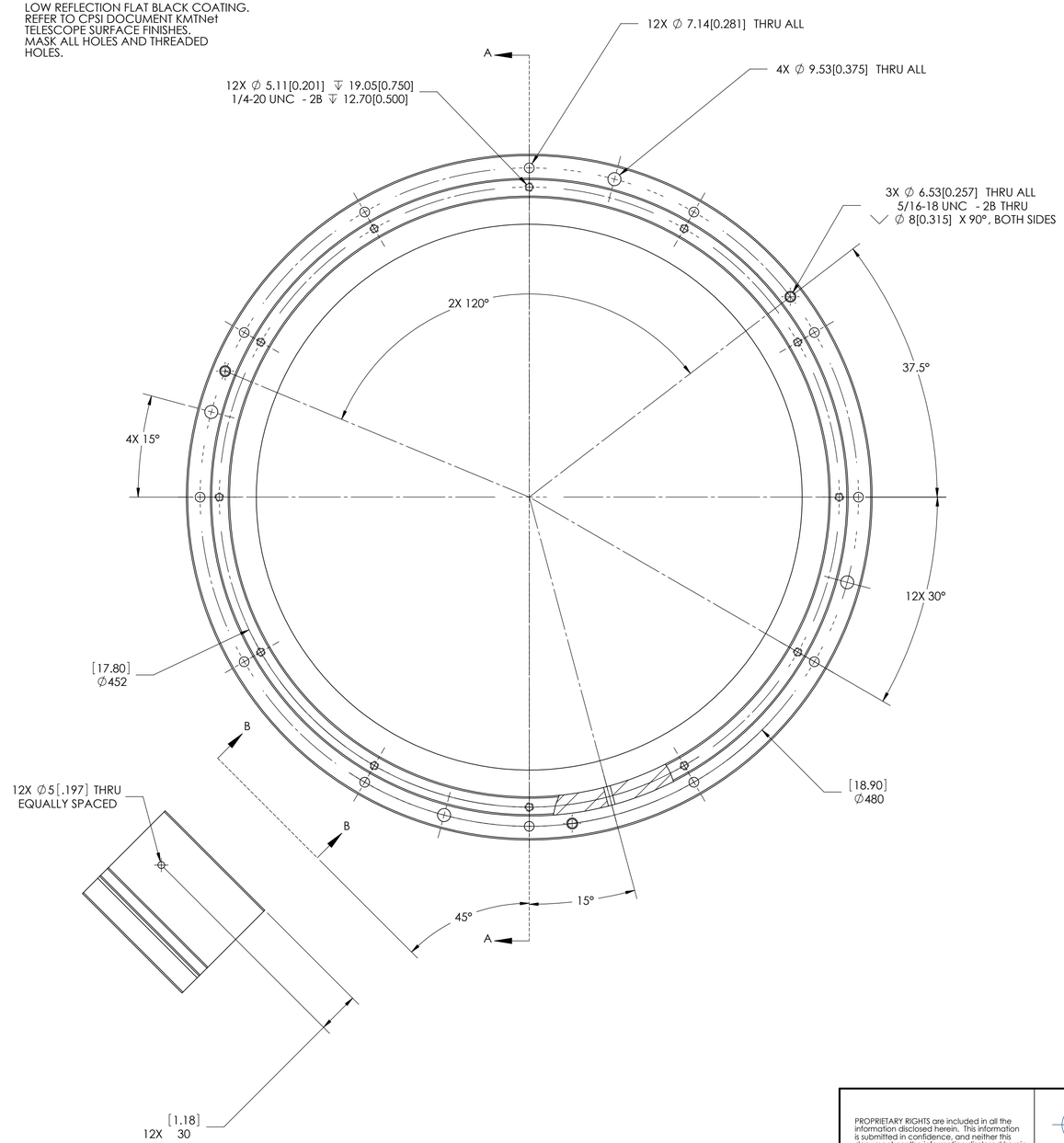

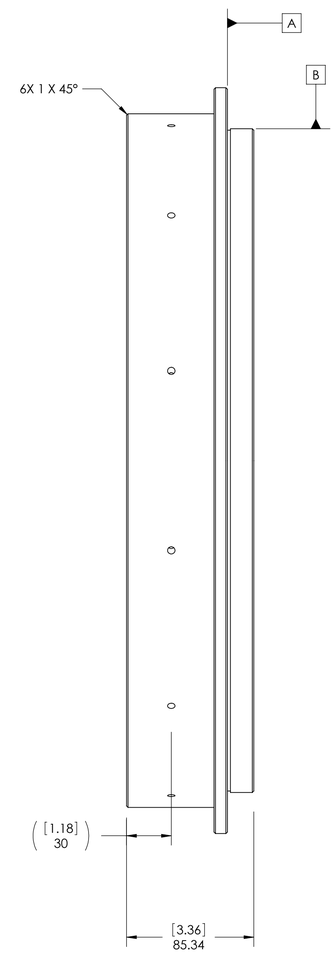

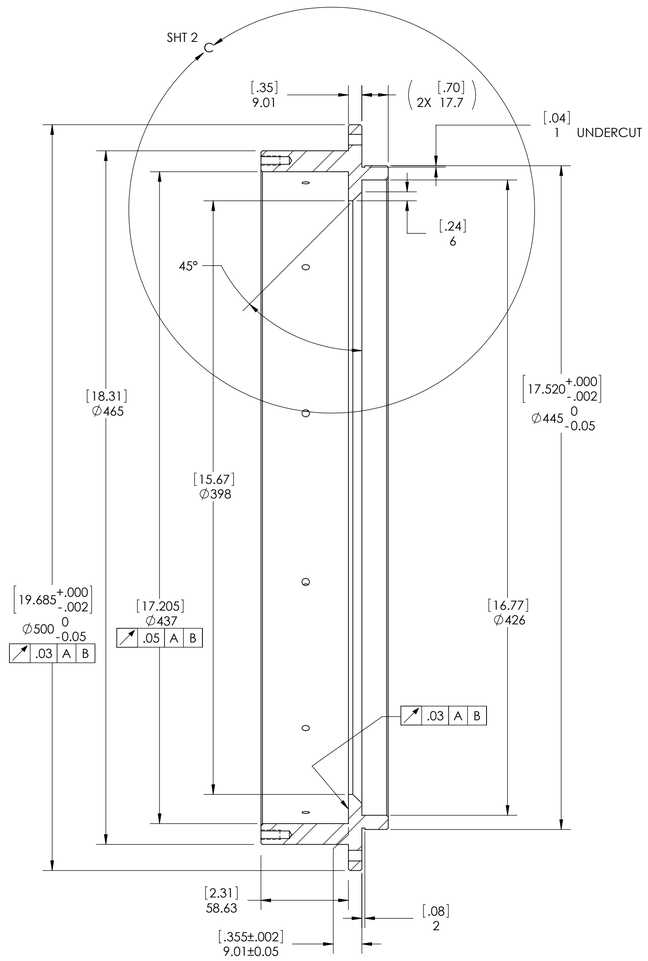

SECTION A-A

PROPRIETARY RIGHTS are included in all the information disclosed herein. This information is submitted in confidence, and neither this document nor the information disclosed herein shall be reproduced or transferred to any other document, nor shall it be used or disclosed to any person for manufacturing or any other reason except as specifically authorized in writing by C P Systems, Inc.

© 2011 C P Systems, Inc.

THIRD ANGLE PROJECTION

TRIANGULAR FLAG NOTE DENOTES CHANGE FROM PREVIOUS REVISION LEVEL

DO NOT SCALE DRAWING

INTERPRET DRAWING IN ACCORDANCE WITH ASME Y14.5M-1994

NEXT ASSY	USED ON
ASM-100096	KMTNet

UNLESS OTHERWISE NOTED:

ALL DIMENSIONS ARE IN MILLIMETERS AND ARE AFTER APPLIED FINISHES

TOLERANCES:

.X: ± .25 .XXX: ± .05
.XX: ± .13 ANGLES: ± 0°30'

ALL PARTS TO BE FREE OF BURRS AND SHARP EDGES

DRAWN: R. PRICE	DATE: 12 OCT 2011		
CHECKED: -	DATE: -		
ENGINEERING: -	DATE: -		
MANUFACTURING: -	DATE: -		
APPROVED: -	DATE:		

C P SYSTEMS, INC.
P.O. BOX 780, 20705 E. MARSH STATION RD., VAIL, AZ 85641

TITLE:

LENS NO. 2 CELL

SCALE: 1:2	SIZE: D	DRAWING NO.: PRT-100084	REV.: REL-A
SHEET: 1 OF 2			

SIZE: D DRAWING NO.: PRT-100084 REV: REL-A

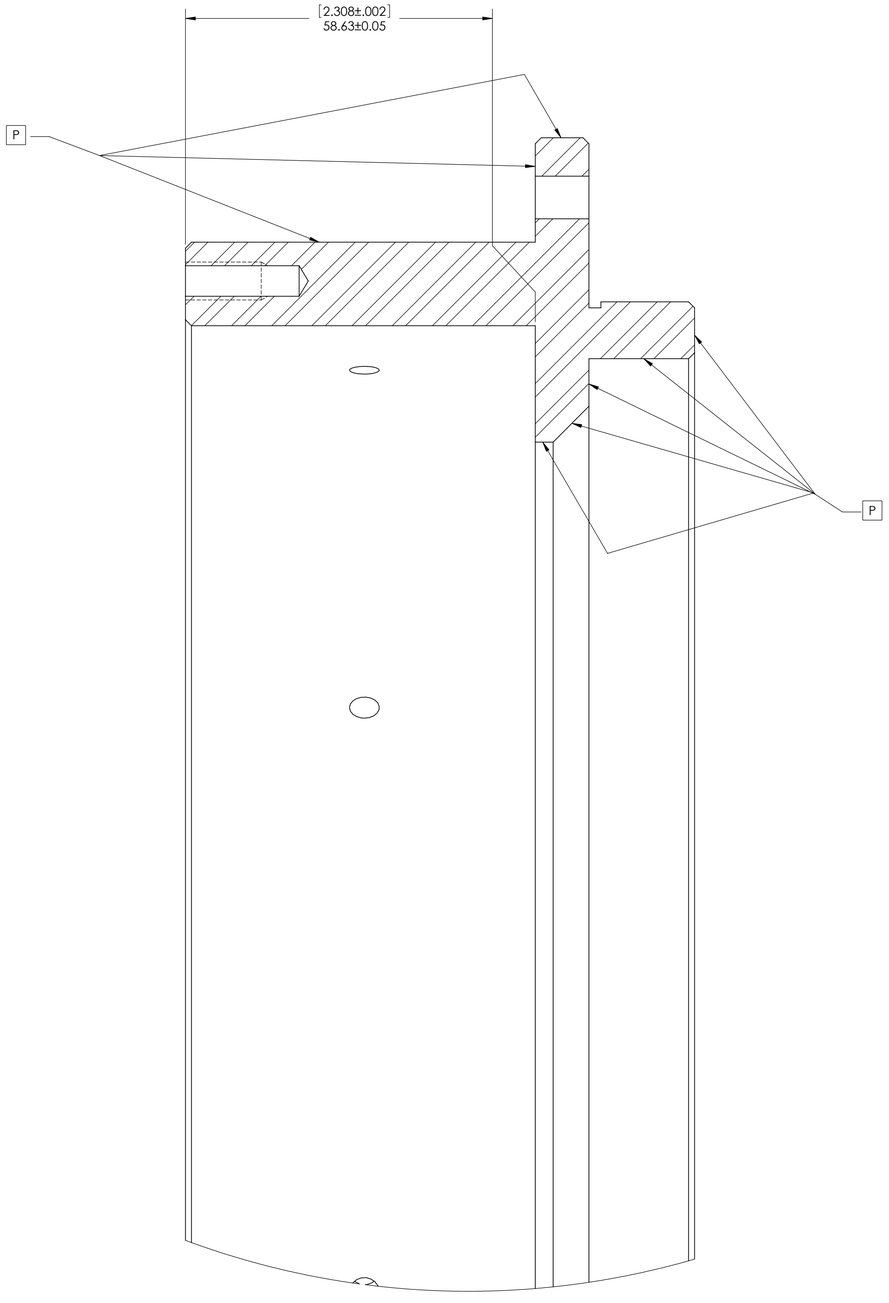

DETAIL C
SCALE 2 : 1
FROM SHT 1

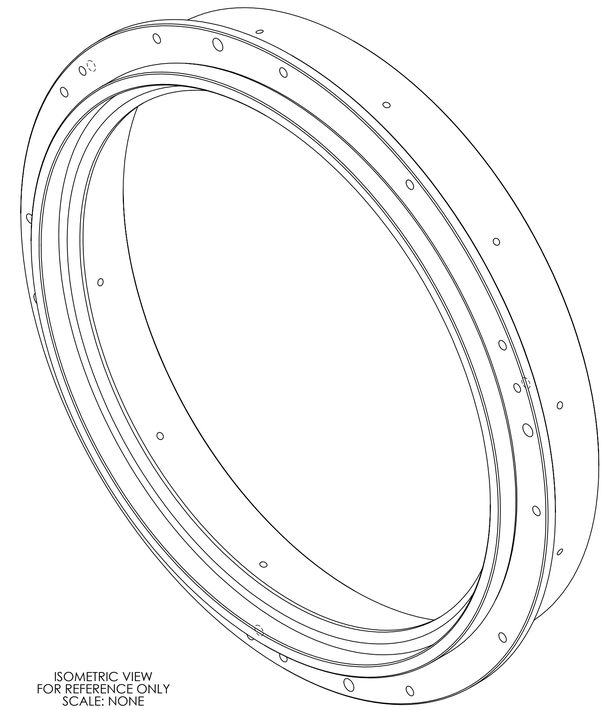

ISOMETRIC VIEW
FOR REFERENCE ONLY
SCALE: NONE

PROPRIETARY RIGHTS are included in all the information disclosed herein. This information is submitted in confidence, and neither this document nor the information disclosed herein shall be reproduced or transferred to any other document, nor shall it be used or disclosed to any person for manufacturing or any other reason except as specifically authorized in writing by C P Systems, Inc.

© 2011 C P Systems, Inc.

C P SYSTEMS, INC.

P.O. BOX 780, 20705 E. MARSH STATION RD., VAIL, AZ 85641

SCALE: 1:2	SIZE: D	DRAWING NO.: PRT-100084	REV.: REL-A
SHEET: 2 OF 2			

REV.: REL-A
SIZE: D DRAWING NO.: PRT-100084

MATERIAL:
AISI 304 / 303
FINISH:
NOTED
WEIGHT:
10575.89 gm

REVISIONS				
ZONE	REV.	DESCRIPTION	DATE	APPROVED

NOTES:

1. PASSIVATE PER ASTM A 967-96
2. PAINT SURFACES MARKED [P] WITH LOW REFLECTION FLAT BLACK COATING. REFER TO CPSI DOCUMENT KMTNet TELESCOPE SURFACE FINISHES. MASK ALL HOLES AND THREADED HOLES.

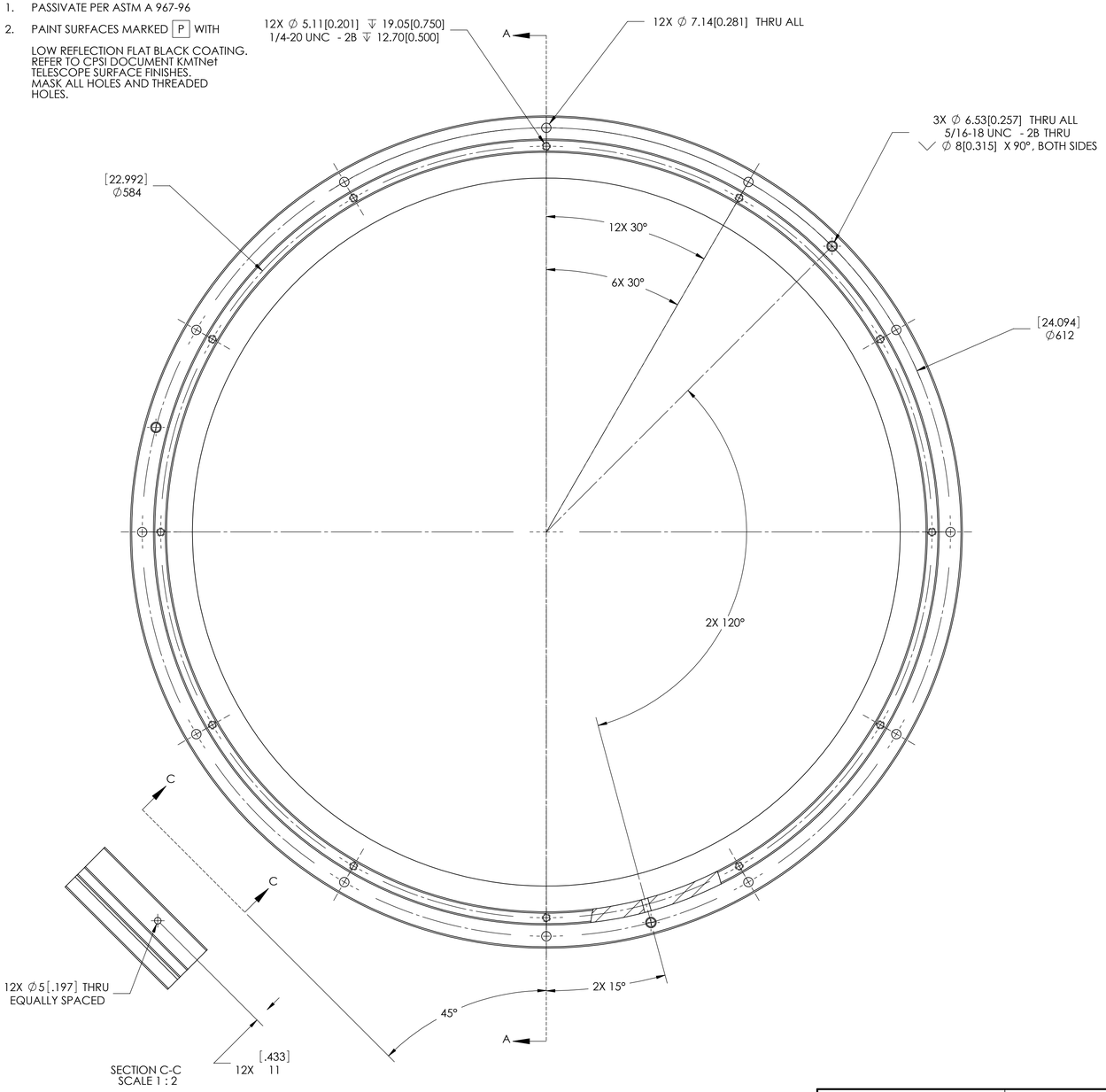

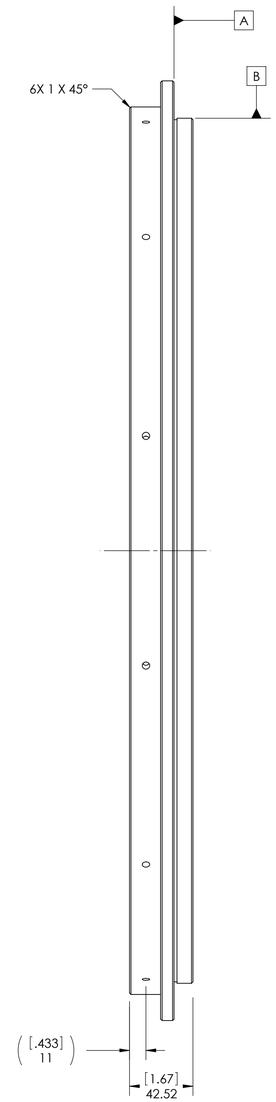

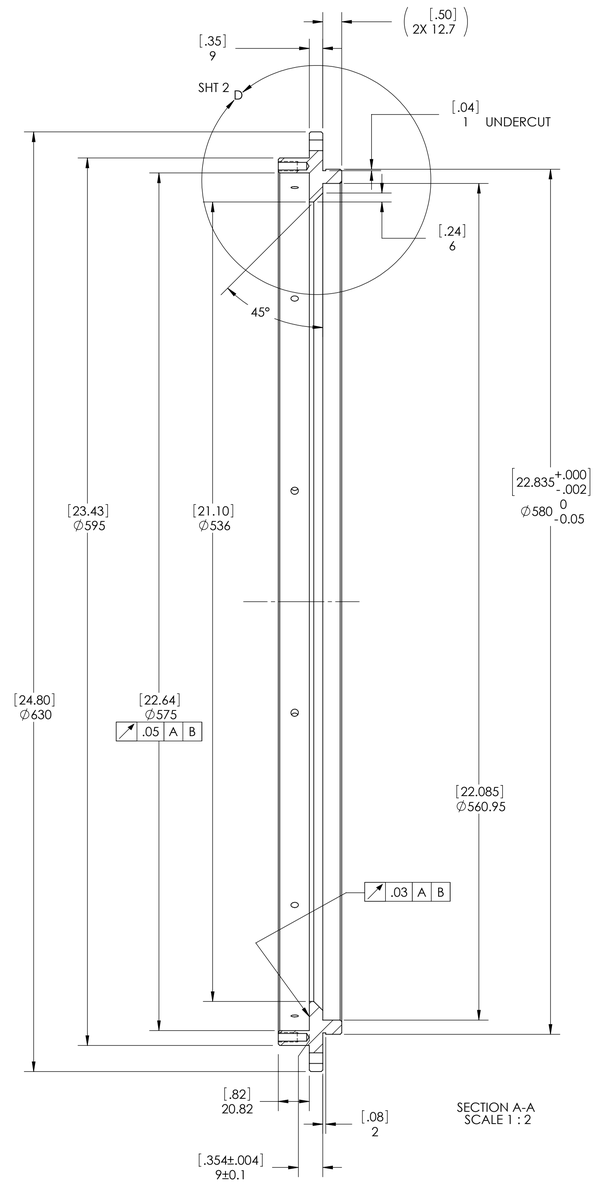

PROPRIETARY RIGHTS are included in all the information disclosed herein. This information is submitted in confidence, and neither this document nor the information disclosed herein shall be reproduced or transferred to any other document, nor shall it be used or disclosed to any person for manufacturing or any other reason except as specifically authorized in writing by C P Systems, Inc.

© 2011 C P Systems, Inc.

THIRD ANGLE PROJECTION

TRIANGULAR FLAG NOTE DENOTES CHANGE FROM PREVIOUS REVISION LEVEL

DO NOT SCALE DRAWING

INTERPRET DRAWING IN ACCORDANCE WITH ASME Y14.5M-1994

NEXT ASSY	USED ON
ASM-100095	KMTNet

UNLESS OTHERWISE NOTED:

ALL DIMENSIONS ARE IN MILLIMETERS AND ARE AFTER APPLIED FINISHES

TOLERANCES:

.X: ± .25 .XXX: ± .05
.XX: ± .13 ANGLES: ± 0°30'

ALL PARTS TO BE FREE OF BURRS AND SHARP EDGES

DRAWN: R. PRICE	DATE: 04 OCT 2011		
CHECKED: -	DATE: -		
ENGINEERING: -	DATE: -		
MANUFACTURING: -	DATE: -		
APPROVED: -	DATE:		

C P SYSTEMS, INC.

P.O. BOX 780, 20705 E. MARSH STATION RD., VAIL, AZ 85641

TITLE: LENS NO. 1 CELL

SCALE: 1:5	SIZE: D	DRAWING NO.: PRT-100085	REV.: REL-A
SHEET: 1 OF 2			

REV REL-A

SIZE: D DRAWING NO.: PRT-100085

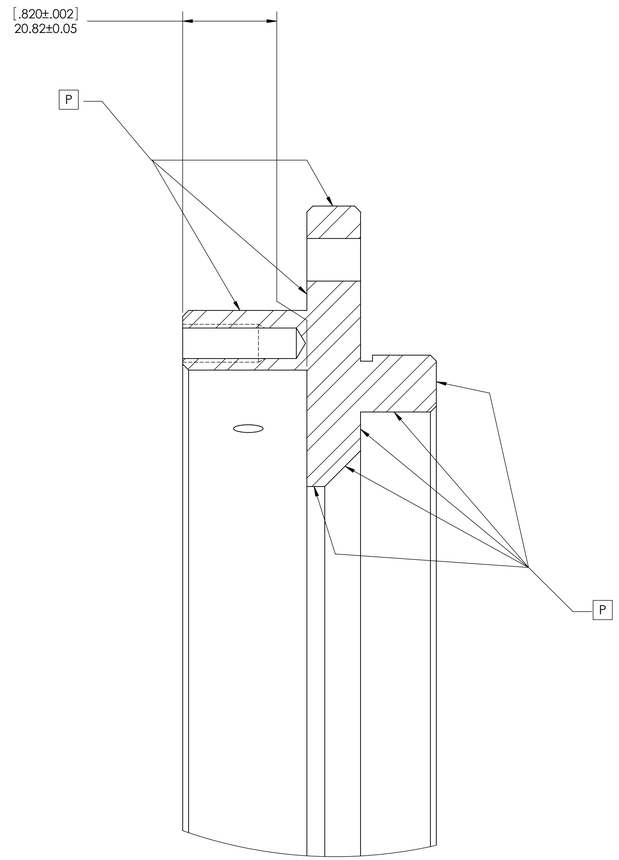

DETAIL D
SCALE 2 : 1
FROM SHT 1

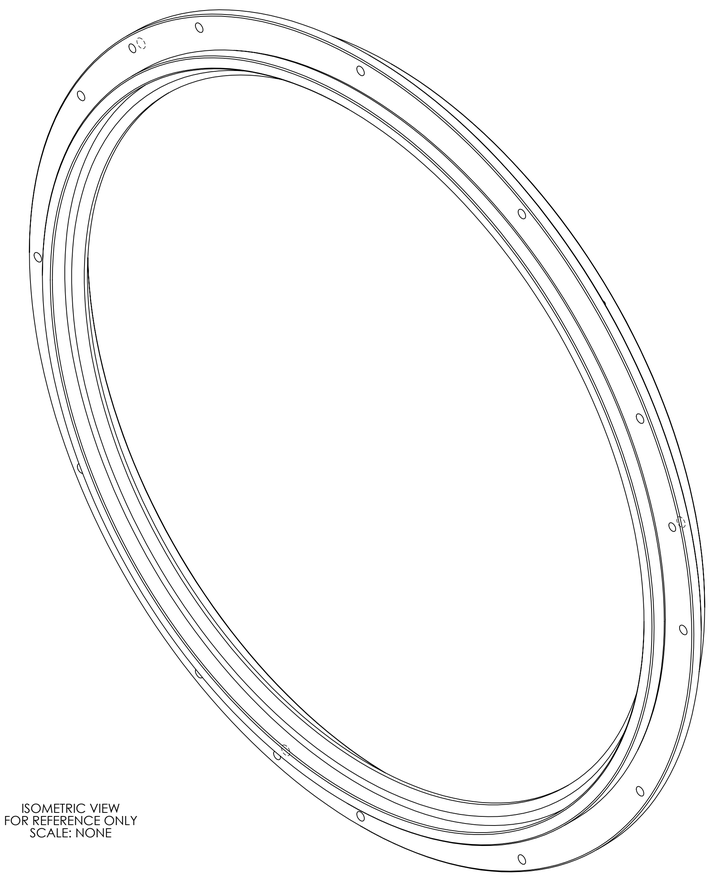

ISOMETRIC VIEW
FOR REFERENCE ONLY
SCALE: NONE

PROPRIETARY RIGHTS are included in all the information disclosed herein. This information is submitted in confidence, and neither this document nor the information disclosed herein shall be reproduced or transferred to any other document, nor shall it be used or disclosed to any person for manufacturing or any other reason except as specifically authorized in writing by C P Systems, Inc.

© 2011 C P Systems, Inc.

C P SYSTEMS, INC.

P.O. BOX 780, 20705 E. MARSH STATION RD., VAIL, AZ 85641

SCALE: 1:5	SIZE: D	DRAWING NO.: PRT-100085	REV.: REL-A
SHEET: 2 OF 2			

REV.: REL-A
SIZE: D DRAWING NO.: PRT-100085

MATERIAL:
DELRIN, BLACK
FINISH:
NOTED
WEIGHT:
34.53 gm

REVISIONS				
ZONE	REV.	DESCRIPTION	DATE	APPROVED

NOTES:

1. PAINT SURFACES MARKED [P] WITH

   LOW REFLECTION FLAT BLACK COATING.
   REFER TO CPSI DOCUMENT KMTNet
   TELESCOPE SURFACE FINISHES.
   MASK ALL HOLES AND THREADED
   HOLES.

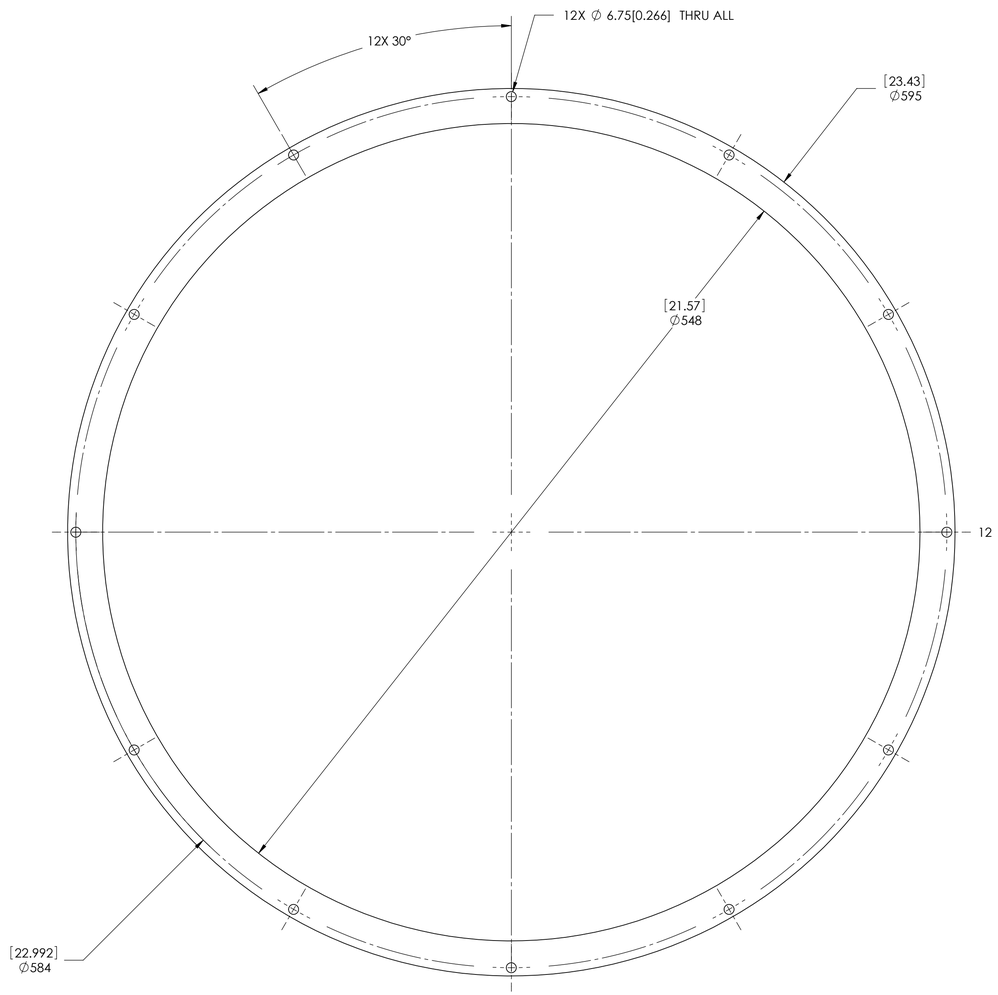

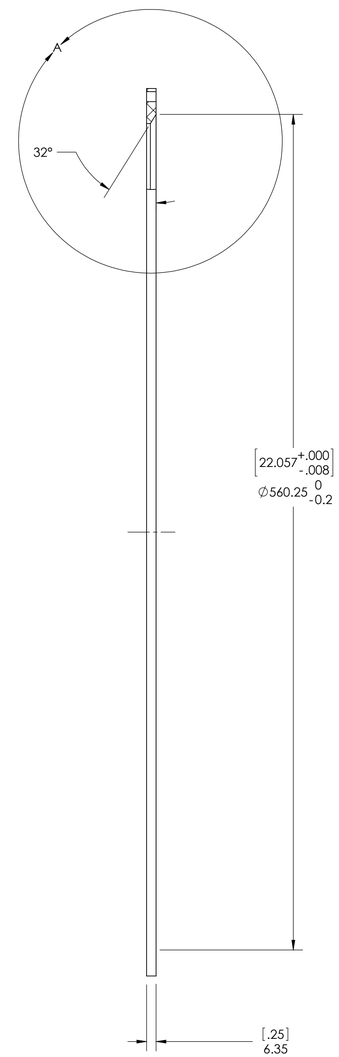

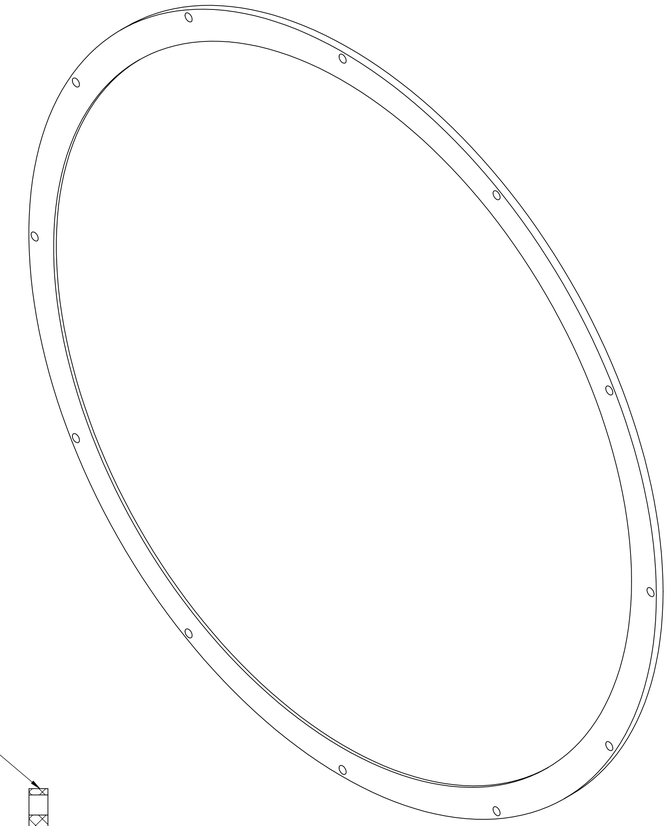

ISOMETRIC VIEW
FOR REFERENCE ONLY
SCALE: NONE

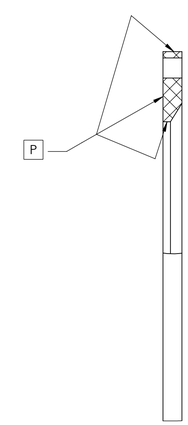

DETAIL A
SCALE 1 : 1

PROPRIETARY RIGHTS are included in all the information disclosed herein. This information is submitted in confidence, and neither this document nor the information disclosed herein shall be reproduced or transferred to any other document, nor shall it be used or disclosed to any person for manufacturing or any other reason except as specifically authorized in writing by C P Systems, Inc.

© 2011 C P Systems, Inc.

THIRD ANGLE PROJECTION

TRIANGULAR FLAG NOTE DENOTES CHANGE FROM PREVIOUS REVISION LEVEL

DO NOT SCALE DRAWING

INTERPRET DRAWING IN ACCORDANCE WITH ASME Y14.5M-1994

NEXT ASSY	USED ON
ASM-100095	KMTNet

UNLESS OTHERWISE NOTED:

ALL DIMENSIONS ARE IN MILLIMETERS AND ARE AFTER APPLIED FINISHES

TOLERANCES:

.X: ± .25 .XXX: ± .05
.XX: ± .13 ANGLES: ± 0°30'

ALL PARTS TO BE FREE OF BURRS AND SHARP EDGES

DRAWN: R. PRICE	DATE: 04 OCT 2011		
CHECKED: -	DATE: -		
ENGINEERING: -	DATE: -		
MANUFACTURING: -	DATE: -		
APPROVED: -	DATE:		

C P SYSTEMS, INC.
P.O. BOX 780, 20705 E. MARSH STATION RD., VAIL, AZ 85641

TITLE:

LENS NO. 1 RETAINER

SCALE: 1:2	SIZE: D	DRAWING NO.: PRT-100086	REV.: REL-A
SHEET: 1 OF 1			

REV REL-A
SIZE: D DRAWING NO. PRT-100086

MATERIAL:
DELRIN, BLACK
FINISH:
NOTED
WEIGHT:
31.32 gm

REVISIONS				
ZONE	REV.	DESCRIPTION	DATE	APPROVED

NOTES:

1. PAINT SURFACES MARKED [P] WITH

   LOW REFLECTION FLAT BLACK COATING.
   REFER TO CPSI DOCUMENT KNTNet
   TELESCOPE SURFACE FINISHES.
   MASK ALL HOLES AND THREADED HOLES.

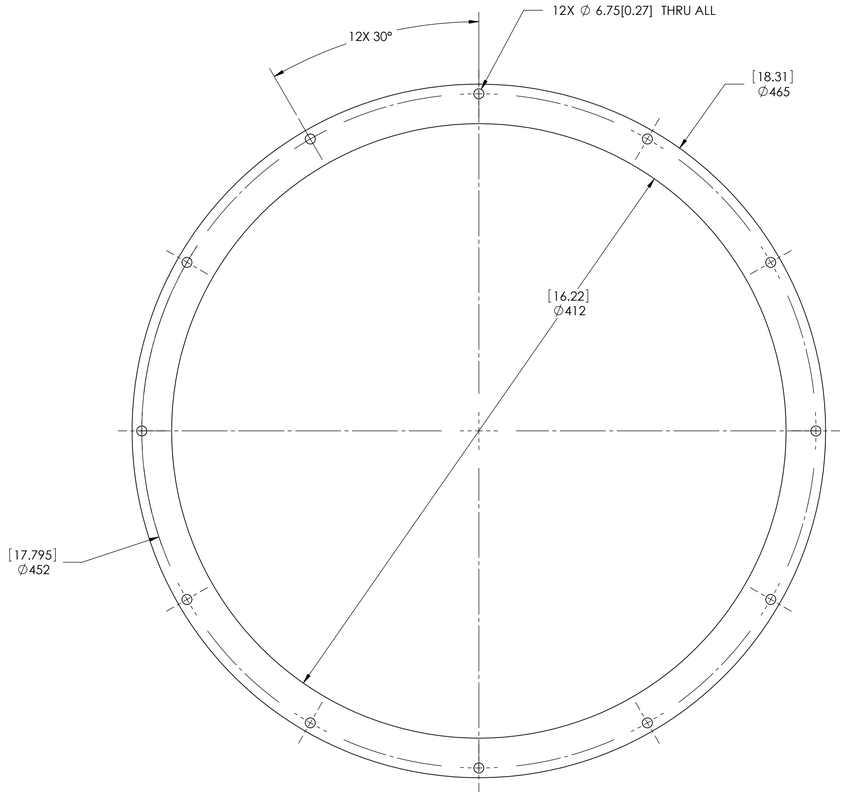

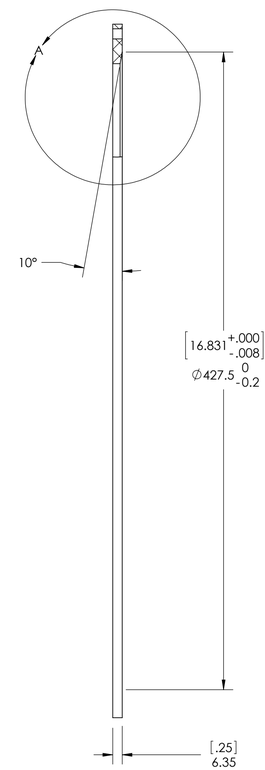

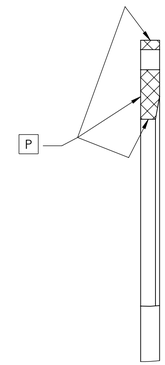

DETAIL A
SCALE 1 : 1

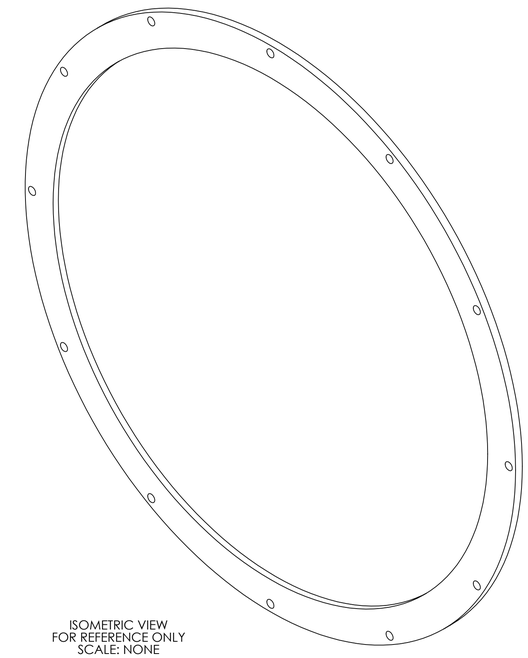

ISOMETRIC VIEW
FOR REFERENCE ONLY
SCALE: NONE

PROPRIETARY RIGHTS are included in all the information disclosed herein. This information is submitted in confidence, and neither this document nor the information disclosed herein shall be reproduced or transferred to any other document, nor shall it be used or disclosed to any person for manufacturing or any other reason except as specifically authorized in writing by C P Systems, Inc.

© 2011 C P Systems, Inc.

THIRD ANGLE PROJECTION

TRIANGULAR FLAG NOTE DENOTES CHANGE FROM PREVIOUS REVISION LEVEL

DO NOT SCALE DRAWING

INTERPRET DRAWING IN ACCORDANCE WITH ASME Y14.5M-1994

NEXT ASSY	USED ON
ASM-100096	KMTNet

UNLESS OTHERWISE NOTED:

ALL DIMENSIONS ARE IN MILLIMETERS AND ARE AFTER APPLIED FINISHES

TOLERANCES:

.X: ± .25 .XXX: ± .05
.XX: ± .13 ANGLES: ± 0°30'

ALL PARTS TO BE FREE OF BURRS AND SHARP EDGES

DRAWN: R. PRICE	DATE: 13 OCT 2011		
CHECKED: -	DATE: -		
ENGINEERING: -	DATE: -		
MANUFACTURING: -	DATE: -		
APPROVED: -	DATE:		

C P SYSTEMS, INC.

P.O. BOX 780, 20705 E. MARSH STATION RD., VAIL, AZ 85641

TITLE:

LENS NO. 2 RETAINER

SCALE: 1:2	SIZE: D	DRAWING NO.: PRT-100087	REV.: REL-A
SHEET: 1 OF 1			

REV REL-A
SIZE: D DRAWING NO.: PRT-100087

MATERIAL:
DELRIN, BLACK
FINISH:
NOTED
WEIGHT:
28.13 gm

REVISIONS				
ZONE	REV.	DESCRIPTION	DATE	APPROVED

NOTES:

1. PAINT SURFACES MARKED [P] WITH

   LOW REFLECTANCE FLAT BLACK COATING.
   REFER TO CPSI DOCUMENT KMTNet
   TELESCOPE SURFACE FINISHES.
   MASK ALL HOLES AND THREADED HOLES.

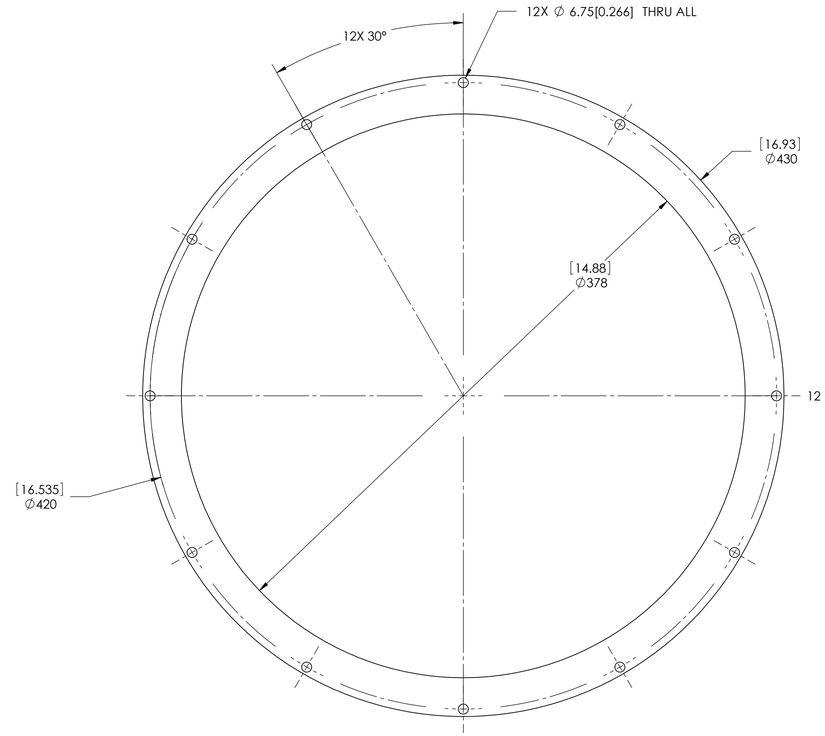

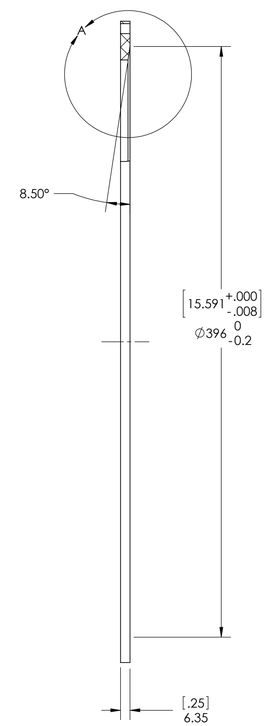

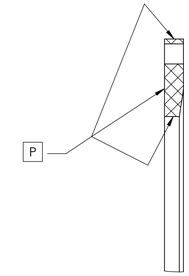

DETAIL A
SCALE 1 : 1

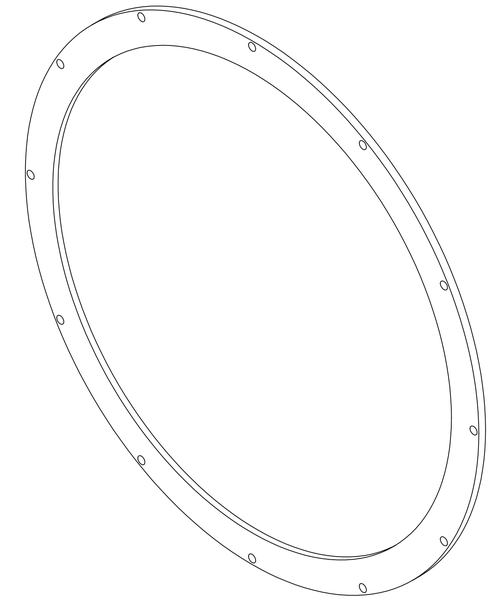

ISOMETRIC VIEW
FOR REFERENCE ONLY
SCALE: NONE

PROPRIETARY RIGHTS are included in all the information disclosed herein. This information is submitted in confidence, and neither this document nor the information disclosed herein shall be reproduced or transferred to any other document, nor shall it be used or disclosed to any person for manufacturing or any other reason except as specifically authorized in writing by C P Systems, Inc.

© 2011 C P Systems, Inc.

THIRD ANGLE PROJECTION

TRIANGULAR FLAG NOTE DENOTES CHANGE FROM PREVIOUS REVISION LEVEL

DO NOT SCALE DRAWING

INTERPRET DRAWING IN ACCORDANCE WITH ASME Y14.5M-1994

NEXT ASSY	USED ON
ASM-100109	KMTNet

UNLESS OTHERWISE NOTED:

ALL DIMENSIONS ARE IN MILLIMETERS AND ARE AFTER APPLIED FINISHES

TOLERANCES:

.X: ± .25 .XXX: ± .05
.XX: ± .13 ANGLES: ± 0°30'

ALL PARTS TO BE FREE OF BURRS AND SHARP EDGES

DRAWN: R. PRICE	DATE: 08 OCT 2011		
CHECKED: -	DATE: -		
ENGINEERING: -	DATE: -		
MANUFACTURING: -	DATE: -		
APPROVED: -	DATE:		

C P SYSTEMS, INC.
P.O. BOX 780, 20705 E. MARSH STATION RD., VAIL, AZ 85641

TITLE:

LENS NO. 3 RETAINER

SCALE: 1:2	SIZE: D	DRAWING NO.: PRT-100088	REV.: REL-A
SHEET: 1 OF 1			

SIZE: D DRAWING NO.: PRT-100088 REV REL-A

MATERIAL:
PTFE (general)
FINISH:
NOTED
WEIGHT:
12.55 gm

REVISIONS				
ZONE	REV.	DESCRIPTION	DATE	APPROVED

NOTES:

1. MATERIAL: .010" THK PTFE FILM, ADHESIVE BACKED
   McMASTER CARR 2208T21

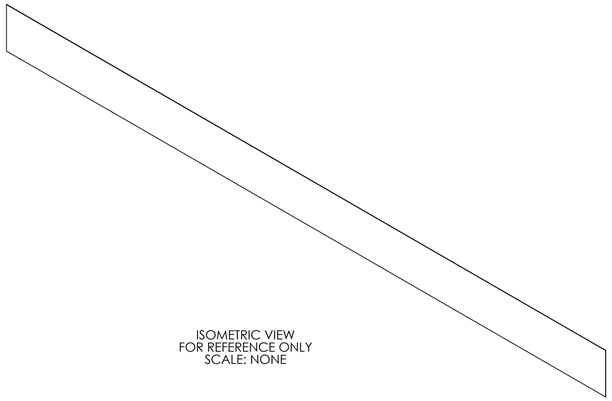

ISOMETRIC VIEW
FOR REFERENCE ONLY
SCALE: NONE

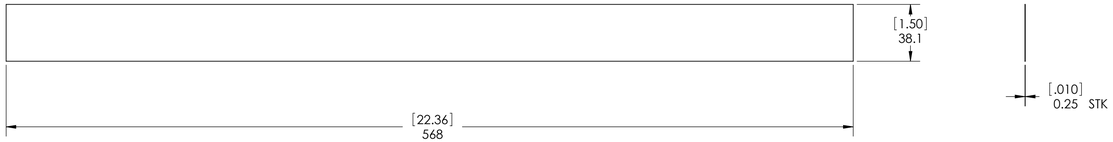

PROPRIETARY RIGHTS are included in all the information disclosed herein. This information is submitted in confidence, and neither this document nor the information disclosed herein shall be reproduced or transferred to any other document, nor shall it be used or disclosed to any person for manufacturing or any other reason except as specifically authorized in writing by C P Systems, Inc.

© 2011 C P Systems, Inc.

THIRD ANGLE PROJECTION

TRIANGULAR FLAG NOTE DENOTES CHANGE FROM PREVIOUS REVISION LEVEL

DO NOT SCALE DRAWING

INTERPRET DRAWING IN ACCORDANCE WITH ASME Y14.5M-1994

NEXT ASSY	USED ON
ASM-100090	KMTNet

UNLESS OTHERWISE NOTED:

ALL DIMENSIONS ARE IN MILLIMETERS AND ARE AFTER APPLIED FINISHES

TOLERANCES:

.X: ± .25 .XXX: ± .05
.XX: ± .13 ANGLES: ± 0°30'

ALL PARTS TO BE FREE OF BURRS AND SHARP EDGES

DRAWN: R. PRICE	DATE: 17 OCT 2011		
CHECKED: -	DATE: -		
ENGINEERING: -	DATE: -		
MANUFACTURING: -	DATE: -		
APPROVED: -	DATE:		

C P SYSTEMS, INC.

P.O. BOX 780, 20705 E. MARSH STATION RD., VAIL, AZ 85641

TITLE:

SUPPORT RAIL WEAR STRIP

SCALE: 1:2	SIZE: D	DRAWING NO.: PRT-100089	REV.: REL-A
SHEET: 1 OF 1			

SIZE: D DRAWING NO.: PRT-100089 REV REL-A

MATERIAL:
Nylon 6/10
FINISH:
NOTED
WEIGHT:
196.33 gm

REVISIONS				
ZONE	REV.	DESCRIPTION	DATE	APPROVED

NOTES:

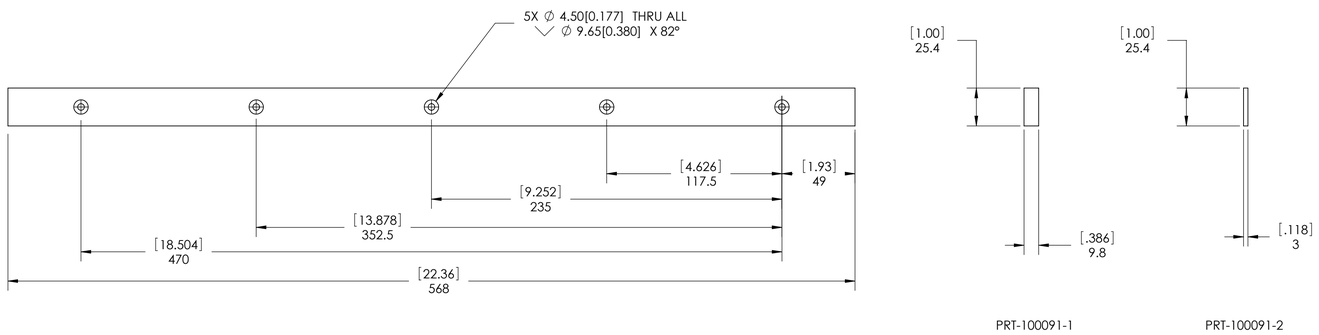

PROPRIETARY RIGHTS are included in all the information disclosed herein. This information is submitted in confidence, and neither this document nor the information disclosed herein shall be reproduced or transferred to any other document, nor shall it be used or disclosed to any person for manufacturing or any other reason except as specifically authorized in writing by C P Systems, Inc.

© 2011 C P Systems, Inc.

THIRD ANGLE PROJECTION

TRIANGULAR FLAG NOTE DENOTES CHANGE FROM PREVIOUS REVISION LEVEL

DO NOT SCALE DRAWING

INTERPRET DRAWING IN ACCORDANCE WITH ASME Y14.5M-1994

NEXT ASSY	USED ON
ASM-100090	KMTNet

UNLESS OTHERWISE NOTED:

ALL DIMENSIONS ARE IN MILLIMETERS AND ARE AFTER APPLIED FINISHES

TOLERANCES:

.X: ± .25 .XXX: ± .05
.XX: ± .13 ANGLES: ± 0°30'

ALL PARTS TO BE FREE OF BURRS AND SHARP EDGES

DRAWN: R. PRICE	DATE: 30 SEPT 2011		
CHECKED: -	DATE: -		
ENGINEERING: -	DATE: -		
MANUFACTURING: -	DATE: -		
APPROVED: -	DATE:		

C P SYSTEMS, INC.
P.O. BOX 780, 20705 E. MARSH STATION RD., VAIL, AZ 85641

TITLE:

GUIDE STRIP

SCALE: 1:2	SIZE: D	DRAWING NO.: PRT-100091	REV.: REL-A
SHEET: 1 OF 1			

REV REL-A
SIZE: D DRAWING NO.: PRT-100091

MATERIAL:
6061 Alloy T6
FINISH:
NOTED
WEIGHT:
319.58 gm

REVISIONS				
ZONE	REV.	DESCRIPTION	DATE	APPROVED

NOTES:

1. FINISH: ANODIZE PER MIL-A-8625, CLASS II, TYPE 2, COLOR - BLACK
2. NOMINAL DIMENSION - ACTUAL DIMENSION DETERMINED BY SPECIFIC OPTICAL PARAMETERS AT ASSEMBLY.

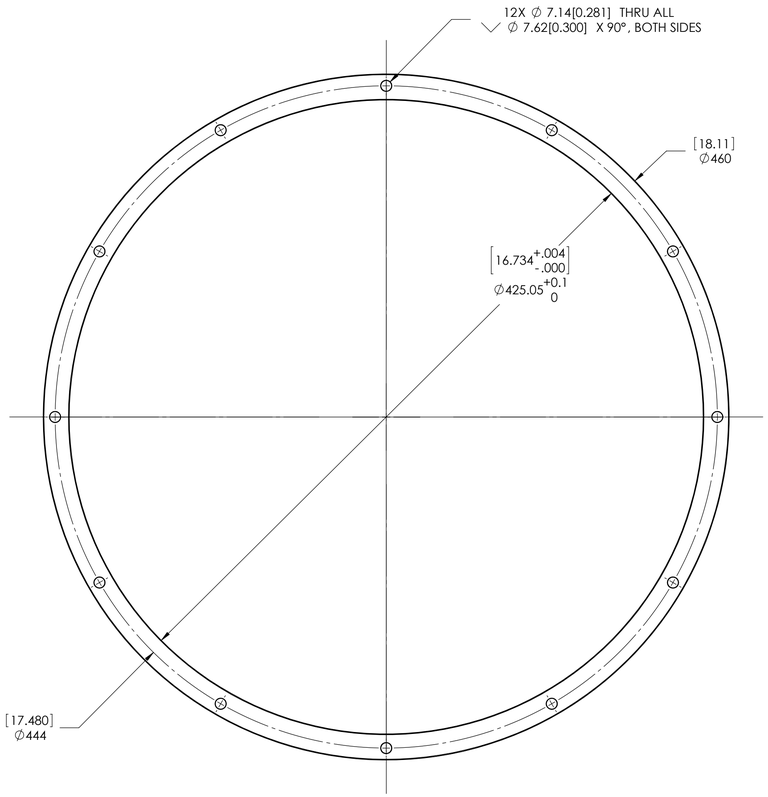

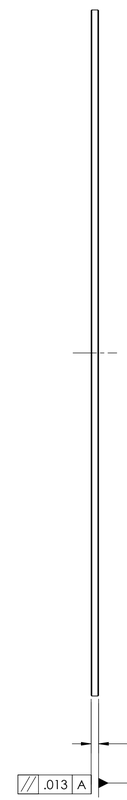

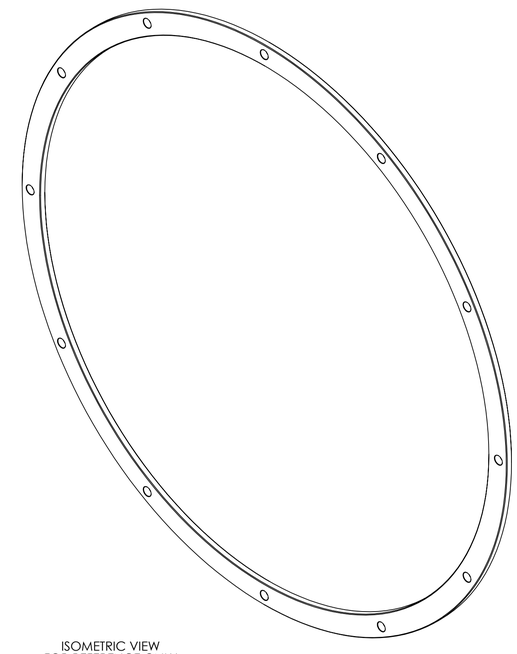

ISOMETRIC VIEW
FOR REFERENCE ONLY
SCALE: NONE

PROPRIETARY RIGHTS are included in all the information disclosed herein. This information is submitted in confidence, and neither this document nor the information disclosed herein shall be reproduced or transferred to any other document, nor shall it be used or disclosed to any person for manufacturing or any other reason except as specifically authorized in writing by C P Systems, Inc.

© 2011 C P Systems, Inc.

THIRD ANGLE PROJECTION

TRIANGULAR FLAG NOTE DENOTES CHANGE FROM PREVIOUS REVISION LEVEL

DO NOT SCALE DRAWING

INTERPRET DRAWING IN ACCORDANCE WITH ASME Y14.5M-1994

NEXT ASSY	USED ON
ASM-100060	KMTNet

UNLESS OTHERWISE NOTED:

ALL DIMENSIONS ARE IN MILLIMETERS AND ARE AFTER APPLIED FINISHES

TOLERANCES:

.X: ± .25 .XXX: ± .05
.XX: ± .13 ANGLES: ± 0°30'

ALL PARTS TO BE FREE OF BURRS AND SHARP EDGES

DRAWN: R. PRICE	DATE: 08 OCT 2011		
CHECKED: -	DATE: -		
ENGINEERING: -	DATE: -		
MANUFACTURING: -	DATE: -		
APPROVED: -	DATE:		

C P SYSTEMS, INC.
P.O. BOX 780, 20705 E. MARSH STATION RD., VAIL, AZ 85641

TITLE:

SHIM, LENS NO. 3 LENS CELL

SCALE: 1:2	SIZE: D	DRAWING NO.: PRT-100092	REV.: REL-A
SHEET: 1 OF 1			

REV REL-A
SIZE: D DRAWING NO.: PRT-100092

MATERIAL:
6061 Alloy T6
FINISH:
NOTED
WEIGHT:
538.23 gm

REVISIONS				
ZONE	REV.	DESCRIPTION	DATE	APPROVED

NOTES:

1. FINISH: ANODIZE PER MIL-A-8625, CLASS II, TYPE 2, COLOR - BLACK
2. NOMINAL DIMENSION - ACTUAL DIMENSION DETERMINED BY SPECIFIC OPTICAL PARAMETERS AT ASSEMBLY.

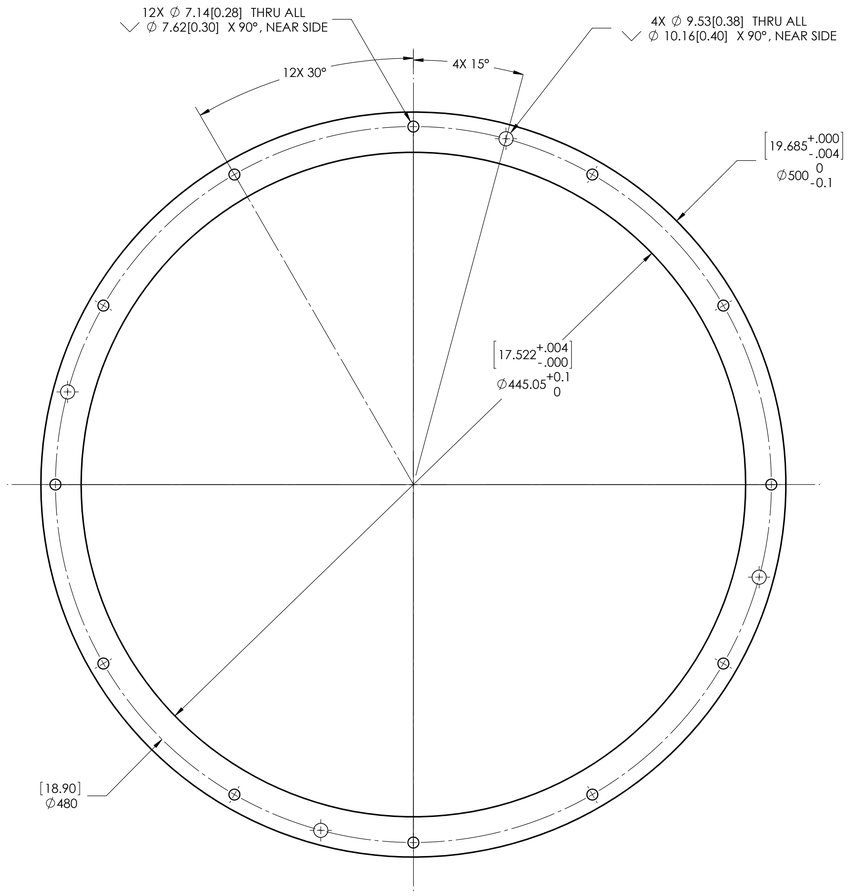

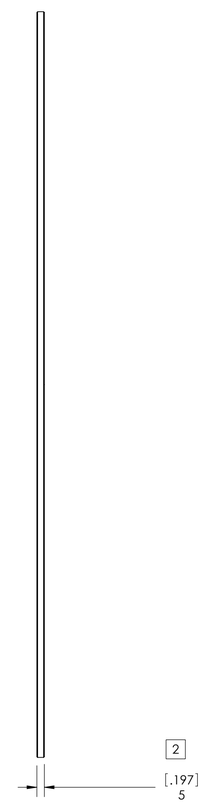

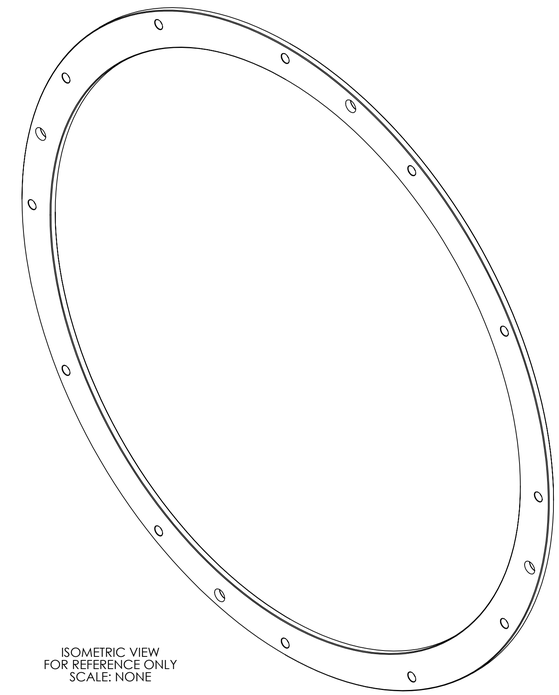

ISOMETRIC VIEW
FOR REFERENCE ONLY
SCALE: NONE

PROPRIETARY RIGHTS are included in all the information disclosed herein. This information is submitted in confidence, and neither this document nor the information disclosed herein shall be reproduced or transferred to any other document, nor shall it be used or disclosed to any person for manufacturing or any other reason except as specifically authorized in writing by C P Systems, Inc.

© 2011 C P Systems, Inc.

THIRD ANGLE PROJECTION

TRIANGULAR FLAG NOTE DENOTES CHANGE FROM PREVIOUS REVISION LEVEL

DO NOT SCALE DRAWING

INTERPRET DRAWING IN ACCORDANCE WITH ASME Y14.5M-1994

NEXT ASSY	USED ON
ASM-100060	KMTNet

UNLESS OTHERWISE NOTED:

ALL DIMENSIONS ARE IN MILLIMETERS AND ARE AFTER APPLIED FINISHES

TOLERANCES:

.X: ± .25 .XXX: ± .05
.XX: ± .13 ANGLES: ± 0°30'

ALL PARTS TO BE FREE OF BURRS AND SHARP EDGES

DRAWN: R. PRICE	DATE: 08 OCT 2011		
CHECKED: -	DATE: -		
ENGINEERING: -	DATE: -		
MANUFACTURING: -	DATE: -		
APPROVED: -	DATE:		

C P SYSTEMS, INC.
P.O. BOX 780, 20705 E. MARSH STATION RD., VAIL, AZ 85641

TITLE:

SHIM, LENS NO. 2 LENS CELL

SCALE: 1:2	SIZE: D	DRAWING NO.: PRT-100093	REV.: REL-A
SHEET: 1 OF 1			

REV REL-A
SIZE: D DRAWING NO: PRT-100093

MATERIAL:
AISI 304 / 303
FINISH:
NOTED
WEIGHT:
90.81 gm

REVISIONS				
ZONE	REV.	DESCRIPTION	DATE	APPROVED

NOTES:

1. PASSIVATE PER ASTM A 976-76
2. [2] MATING PART IS PRT-100080

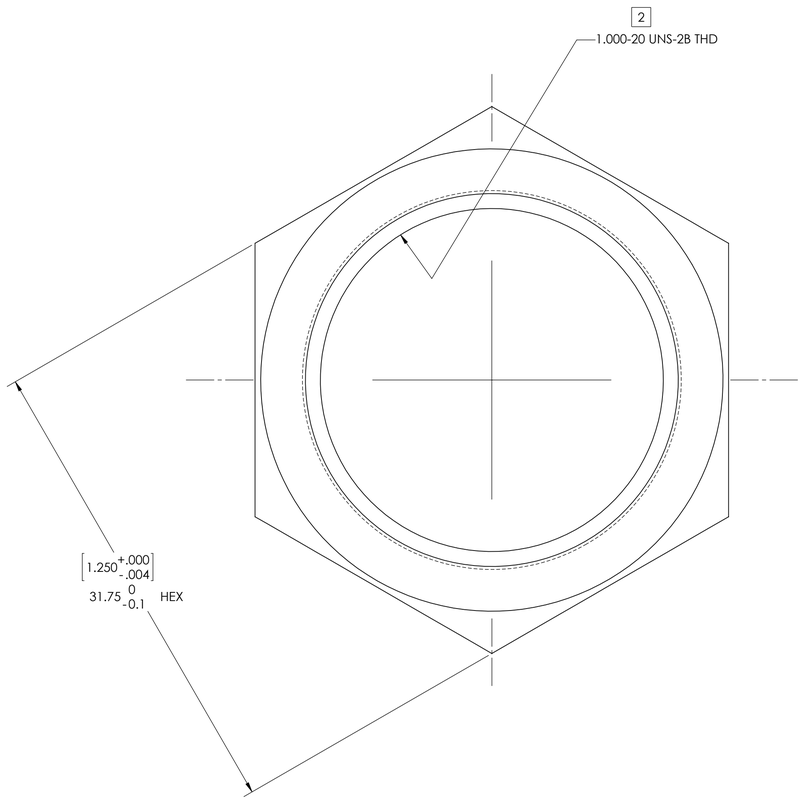

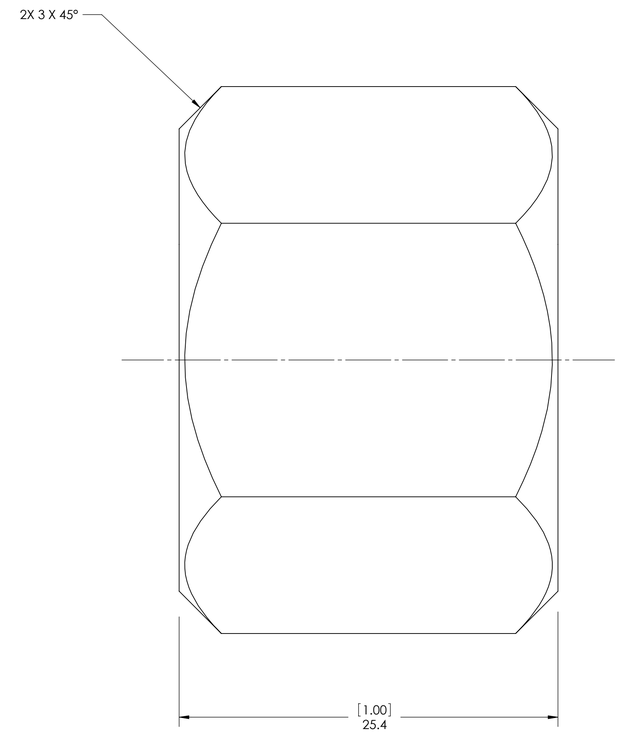

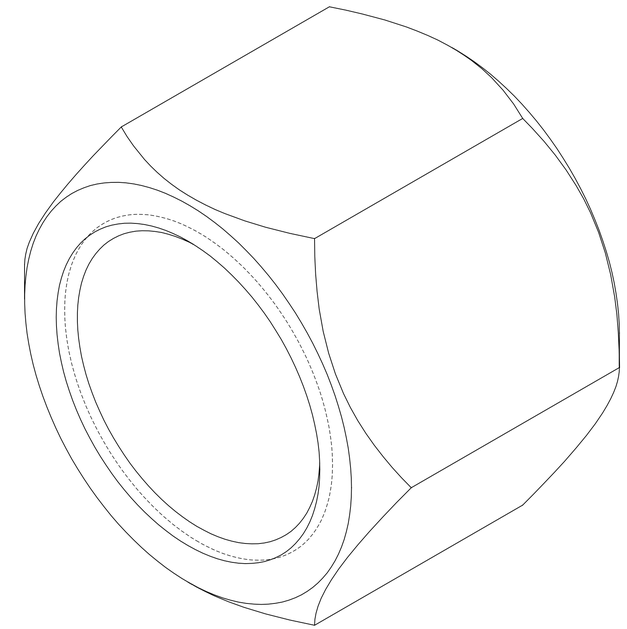

ISOMETRIC VIEW
FOR REFERENCE ONLY
SCALE: NONE

PROPRIETARY RIGHTS are included in all the information disclosed herein. This information is submitted in confidence, and neither this document nor the information disclosed herein shall be reproduced or transferred to any other document, nor shall it be used or disclosed to any person for manufacturing or any other reason except as specifically authorized in writing by C P Systems, Inc.

© 2011 C P Systems, Inc.

THIRD ANGLE PROJECTION

TRIANGULAR FLAG NOTE DENOTES CHANGE FROM PREVIOUS REVISION LEVEL

DO NOT SCALE DRAWING

INTERPRET DRAWING IN ACCORDANCE WITH ASME Y14.5M-1994

NEXT ASSY	USED ON
ASM-100146	KMTNet

UNLESS OTHERWISE NOTED:

ALL DIMENSIONS ARE IN MILLIMETERS AND ARE AFTER APPLIED FINISHES

TOLERANCES:

.X: ± .25 .XXX: ± .05
.XX: ± .13 ANGLES: ± 0°30'

ALL PARTS TO BE FREE OF BURRS AND SHARP EDGES

DRAWN: R. PRICE	DATE: 31 OCT 2011		
CHECKED: R. PRICE	DATE: -		
ENGINEERING: -	DATE: -		
MANUFACTURING: -	DATE: -		
APPROVED: -	DATE:		

C P SYSTEMS, INC.
P.O. BOX 780, 20705 E. MARSH STATION RD., VAIL, AZ 85641

TITLE:

SPIDER ATTACHMENT NUT

SCALE: 5:1	SIZE: D	DRAWING NO.: PRT-100110	REV.: REL-A
SHEET: 1 OF 1			

SIZE: D DRAWING NO.: PRT-100110 REV REL-A

MATERIAL:
6061 Alloy T6
FINISH:
NOTED
WEIGHT:
309.57 gm

REVISIONS				
ZONE	REV.	DESCRIPTION	DATE	APPROVED

NOTES:

1. ANODIZE PER MIL-A-8625, TYPE II, CLASS 2, COLOR - BLACK

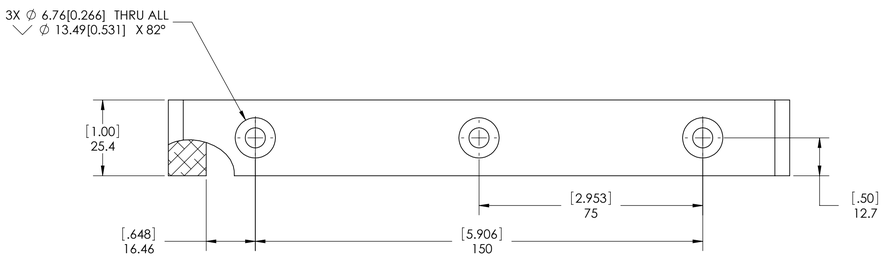

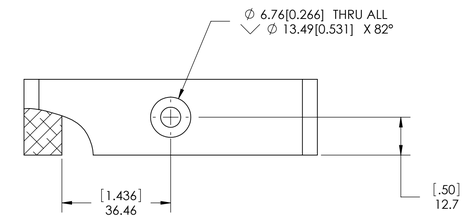

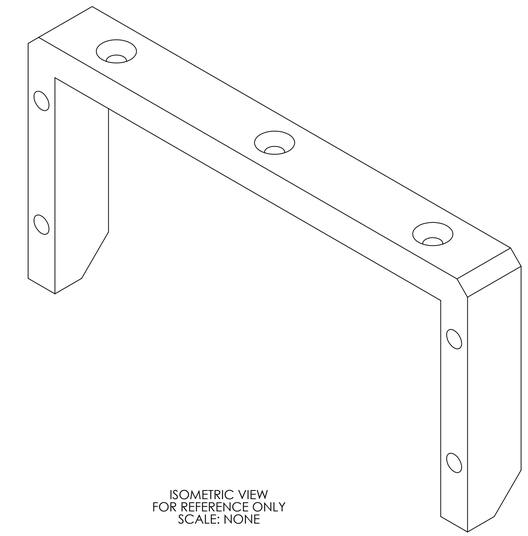

ISOMETRIC VIEW
FOR REFERENCE ONLY
SCALE: NONE

-1 PART

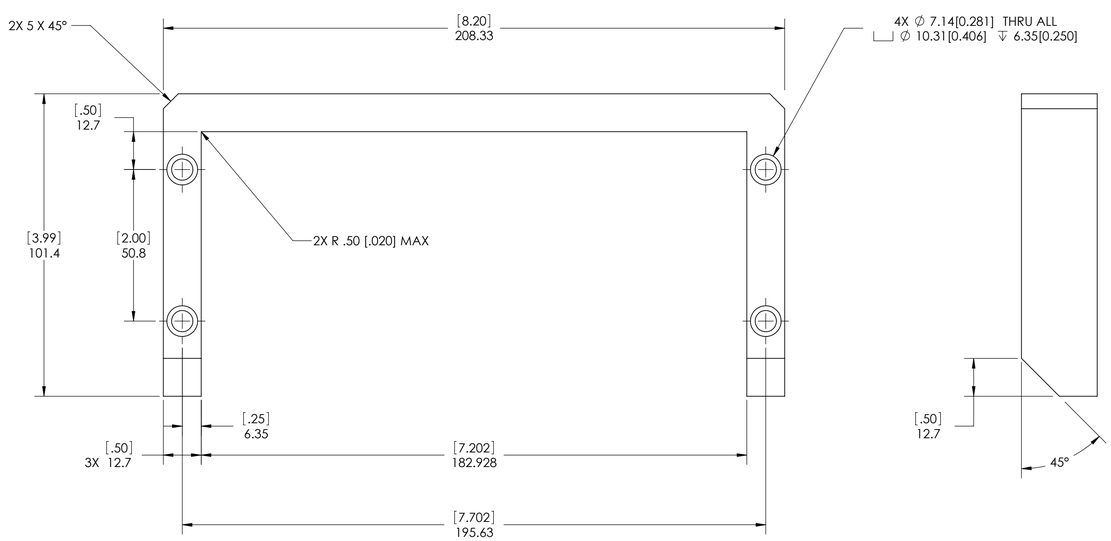

-1 PART

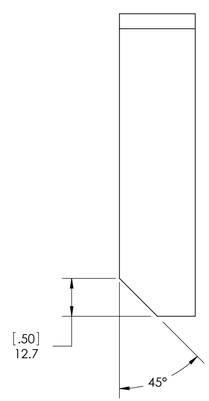

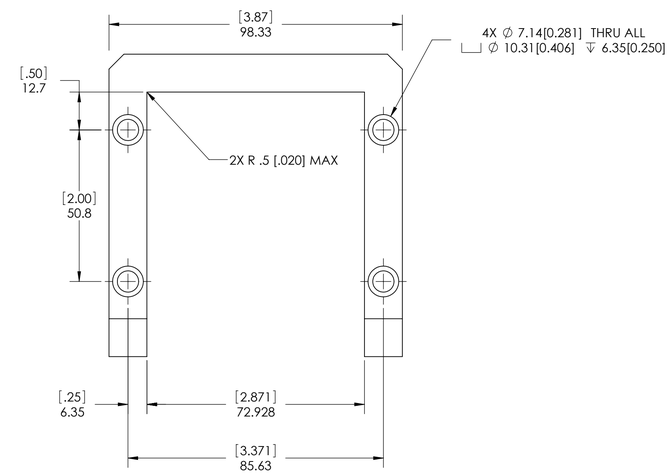

-2 PART

PROPRIETARY RIGHTS are included in all the information disclosed herein. This information is submitted in confidence, and neither this document nor the information disclosed herein shall be reproduced or transferred to any other document, nor shall it be used or disclosed to any person for manufacturing or any other reason except as specifically authorized in writing by C P Systems, Inc.

© 2011 C P Systems, Inc.

THIRD ANGLE PROJECTION

TRIANGULAR FLAG NOTE DENOTES CHANGE FROM PREVIOUS REVISION LEVEL

DO NOT SCALE DRAWING

INTERPRET DRAWING IN ACCORDANCE WITH ASME Y14.5M-1994

NEXT ASSY	USED ON
ASM-100060	KMTNet

UNLESS OTHERWISE NOTED:

ALL DIMENSIONS ARE IN MILLIMETERS AND ARE AFTER APPLIED FINISHES

TOLERANCES:

.X: ± .25 .XXX: ± .05
.XX: ± .13 ANGLES: ± 0°30'

ALL PARTS TO BE FREE OF BURRS AND SHARP EDGES

DRAWN: R. PRICE	DATE: 04 NOV 2011		
CHECKED: -	DATE: -		
ENGINEERING: -	DATE: -		
MANUFACTURING: -	DATE: -		
APPROVED: -	DATE:		

C P SYSTEMS, INC.
P.O. BOX 780, 20705 E. MARSH STATION RD., VAIL, AZ 85641

TITLE:

BRACKET, FILTER/SHUTTER ASSEMBLY

SCALE: 2:1	SIZE: D	DRAWING NO.: PRT-100111	REV.: REL-A
SHEET: 1 OF 1			

REV REL-A
SIZE: D DRAWING NO.: PRT-100111

MATERIAL:
ASTM A36 Steel
FINISH:
NOTED
WEIGHT:
6713.11 gm

REVISIONS				
ZONE	REV.	DESCRIPTION	DATE	APPROVED

NOTES:

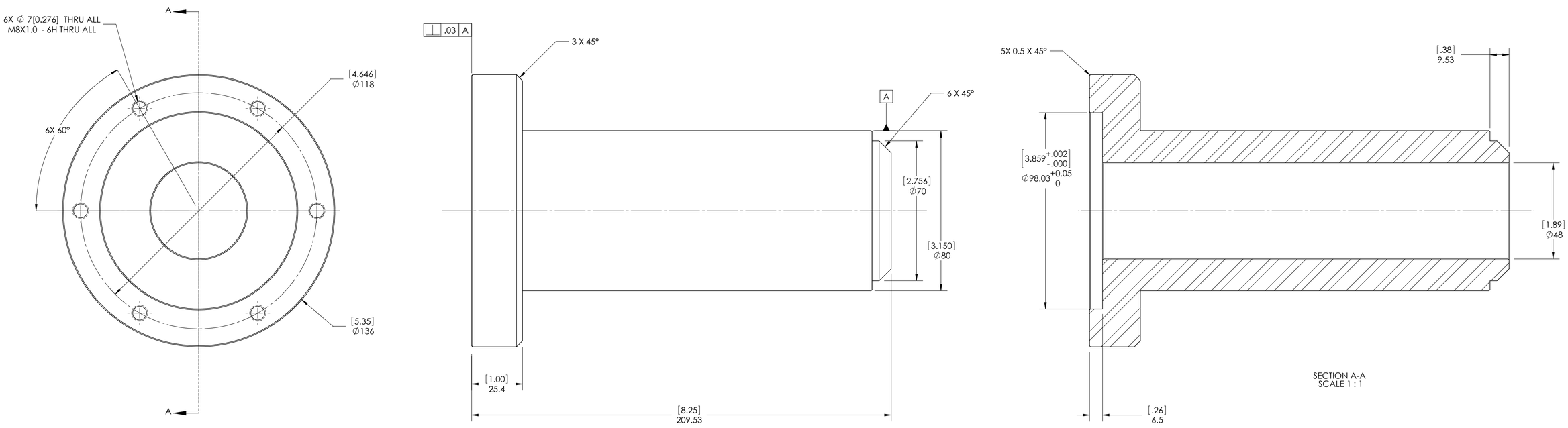

PROPRIETARY RIGHTS are included in all the information disclosed herein. This information is submitted in confidence, and neither this document nor the information disclosed herein shall be reproduced or transferred to any other document, nor shall it be used or disclosed to any person for manufacturing or any other reason except as specifically authorized in writing by C P Systems, Inc.

© 2011 C P Systems, Inc.

THIRD ANGLE PROJECTION

TRIANGULAR FLAG NOTE DENOTES CHANGE FROM PREVIOUS REVISION LEVEL

DO NOT SCALE DRAWING

INTERPRET DRAWING IN ACCORDANCE WITH ASME Y14.5M-1994

NEXT ASSY	USED ON
ASM-100136	KMTNet

UNLESS OTHERWISE NOTED:

ALL DIMENSIONS ARE IN MILLIMETERS AND ARE AFTER APPLIED FINISHES

TOLERANCES:

.X: ± .25 .XXX: ± .05
.XX: ± .13 ANGLES: ± 0°30'

ALL PARTS TO BE FREE OF BURRS AND SHARP EDGES

DRAWN: R. PRICE	DATE: 14 NOV 2011		
CHECKED: -	DATE: -		
ENGINEERING: -	DATE: -		
MANUFACTURING: -	DATE: -		
APPROVED: -	DATE:		

C P SYSTEMS, INC.
P.O. BOX 780, 20705 E. MARSH STATION RD., VAIL, AZ 85641

TITLE:

FOCUS MOTOR ADAPTER

SCALE: 1:2	SIZE: D	DRAWING NO.: PRT-100131	REV.: REL-A
SHEET: 1 OF 1			

REV REL-A
SIZE: D DRAWING NO.: PRT-100131

MATERIAL:
AISI 304 / 303
FINISH:
NOTED
WEIGHT:
774.75 gm

REVISIONS				
ZONE	REV.	DESCRIPTION	DATE	APPROVED
	A	INITIAL RELEASE	14 NOV 2011	RSP
	B	ZONE B5: CHANGED 166 TO 162.83 ZONE B5: CHANGED 160 TO 156.83	4/30/2012	RSP

NOTES:

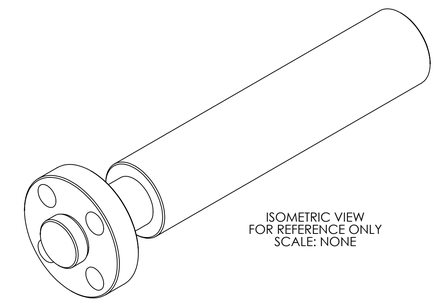

ISOMETRIC VIEW
FOR REFERENCE ONLY
SCALE: NONE

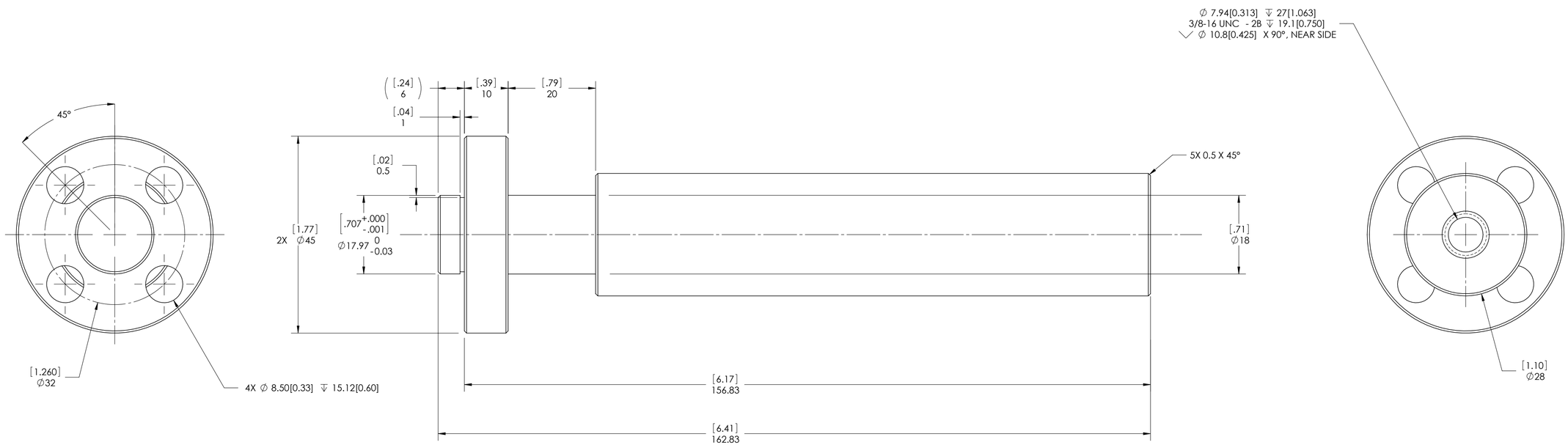

PROPRIETARY RIGHTS are included in all the information disclosed herein. This information is submitted in confidence, and neither this document nor the information disclosed herein shall be reproduced or transferred to any other document, nor shall it be used or disclosed to any person for manufacturing or any other reason except as specifically authorized in writing by C P Systems, Inc.

© 2011 C P Systems, Inc.

THIRD ANGLE PROJECTION

TRIANGULAR FLAG NOTE DENOTES CHANGE FROM PREVIOUS REVISION LEVEL

DO NOT SCALE DRAWING

INTERPRET DRAWING IN ACCORDANCE WITH ASME Y14.5M-1994

NEXT ASSY	USED ON
ASM-100146	KMTNet

UNLESS OTHERWISE NOTED:

ALL DIMENSIONS ARE IN MILLIMETERS AND ARE AFTER APPLIED FINISHES

TOLERANCES:

.X: ± .25 .XXX: ± .05
.XX: ± .13 ANGLES: ± 0°30'

ALL PARTS TO BE FREE OF BURRS AND SHARP EDGES

DRAWN: R. PRICE	DATE: 14 NOV 2011		
CHECKED: -	DATE: -		
ENGINEERING: -	DATE: -		
MANUFACTURING: -	DATE: -		
APPROVED: -	DATE:		

C P SYSTEMS, INC.
P.O. BOX 780, 20705 E. MARSH STATION RD., VAIL, AZ 85641

TITLE:

FOCUS MOTOR EXTENSION

SCALE: 1:1	SIZE: D	DRAWING NO.: PRT-100132	REV.: B-01
SHEET: 1 OF 1			

REV B-01
SIZE: D DRAWING NO.: PRT-100132

MATERIAL:
ASTM A36 Steel
FINISH:
NOTED
WEIGHT:
1653.74 gm

REVISIONS				
ZONE	REV.	DESCRIPTION	DATE	APPROVED

NOTES:

1. TWO PIECE CONSTRUCTION NOT PERMISSIBLE.

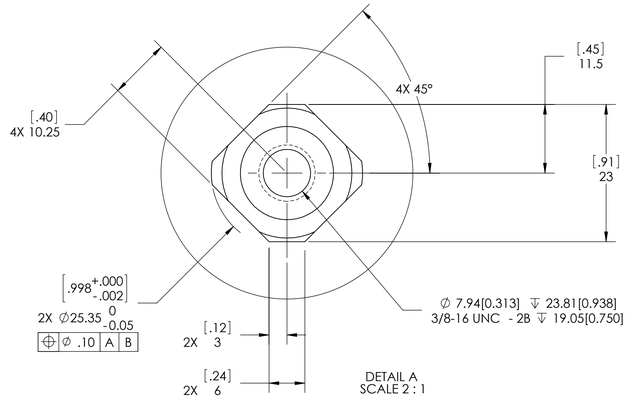

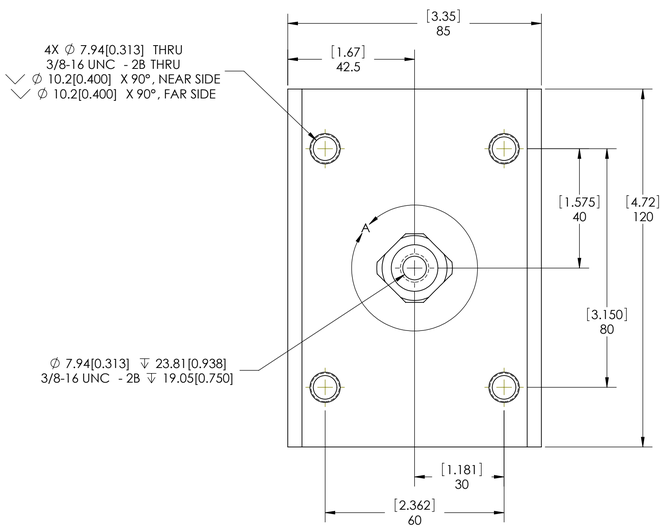

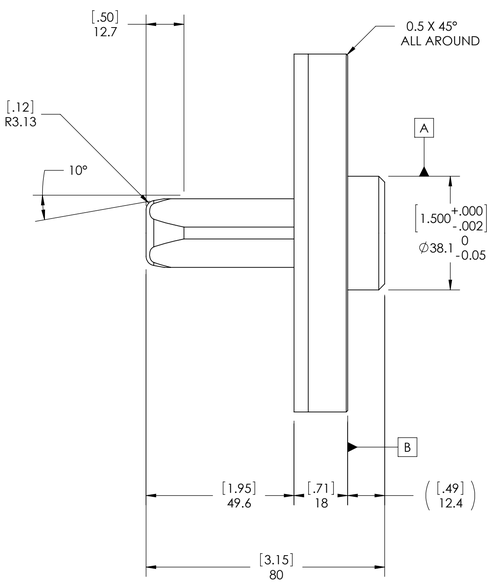

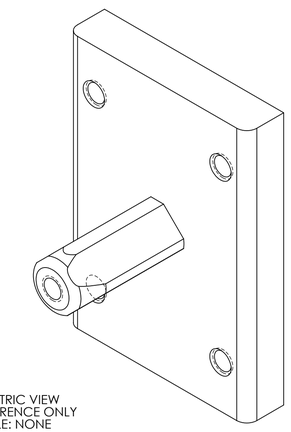

ISOMETRIC VIEW
FOR REFERENCE ONLY
SCALE: NONE

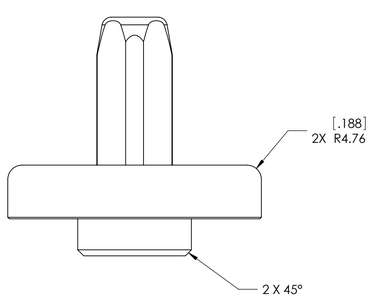

PROPRIETARY RIGHTS are included in all the information disclosed herein. This information is submitted in confidence, and neither this document nor the information disclosed herein shall be reproduced or transferred to any other document, nor shall it be used or disclosed to any person for manufacturing or any other reason except as specifically authorized in writing by C P Systems, Inc.

© 2011 C P Systems, Inc.

THIRD ANGLE PROJECTION

TRIANGULAR FLAG NOTE DENOTES CHANGE FROM PREVIOUS REVISION LEVEL

DO NOT SCALE DRAWING

INTERPRET DRAWING IN ACCORDANCE WITH ASME Y14.5M-1994

NEXT ASSY	USED ON
ICD-100136	KMTNet

UNLESS OTHERWISE NOTED:

ALL DIMENSIONS ARE IN MILLIMETERS AND ARE AFTER APPLIED FINISHES

TOLERANCES:

.X: ± .25 .XXX: ± .05
.XX: ± .13 ANGLES: ± 0°30'

ALL PARTS TO BE FREE OF BURRS AND SHARP EDGES

DRAWN: R. PRICE	DATE: 03 SEPT 2011		
CHECKED: -	DATE: -		
ENGINEERING: -	DATE: -		
MANUFACTURING: -	DATE: -		
APPROVED: -	DATE:		

C P SYSTEMS, INC.
P.O. BOX 780, 20705 E. MARSH STATION RD., VAIL, AZ 85641

TITLE:

DIAMOND PIN LOCATOR, RING FLEXURE

SCALE: 1:1	SIZE: D	DRAWING NO.: PRT-100133	REV.: REL-A
SHEET: 1 OF 1			

SIZE: D DRAWING NO.: PRT-100133 REV REL-A

MATERIAL:
ASTM A36 Steel
FINISH:
NOTED
WEIGHT:
47374.57 gm

REVISIONS				
ZONE	REV.	DESCRIPTION	DATE	APPROVED

NOTES:

1. WELDED CONSTRUCTION NOT PERMISSIBLE
2. FINISH: PAINT ALL SURFACES EXCEPT THOSE MARKED [M] WITH LOW REFLECTION FLAT BLACK COATING. REFER TO CPSI DOCUMENT KMTNet TELESCOPE SURFACE FINISHES. MASK ALL HOLES AND THREADED HOLES.

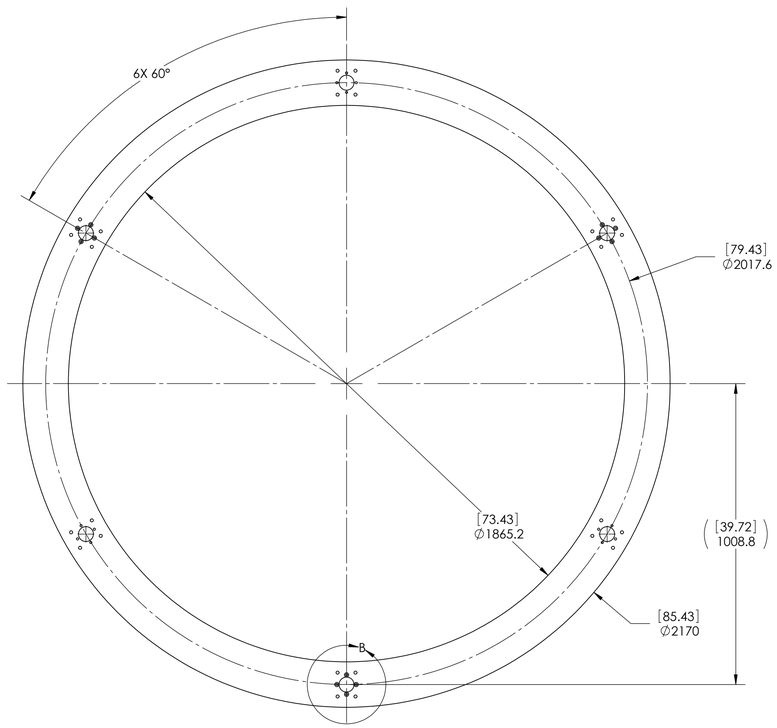

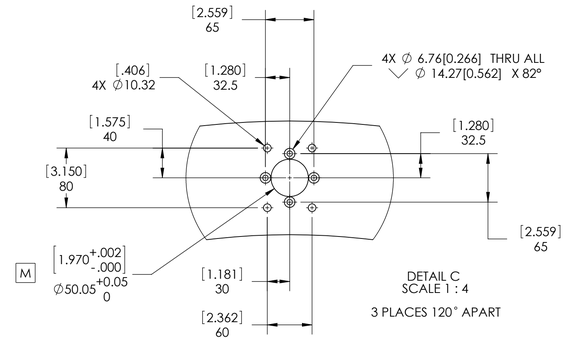

DETAIL C
SCALE 1 : 4
3 PLACES 120° APART

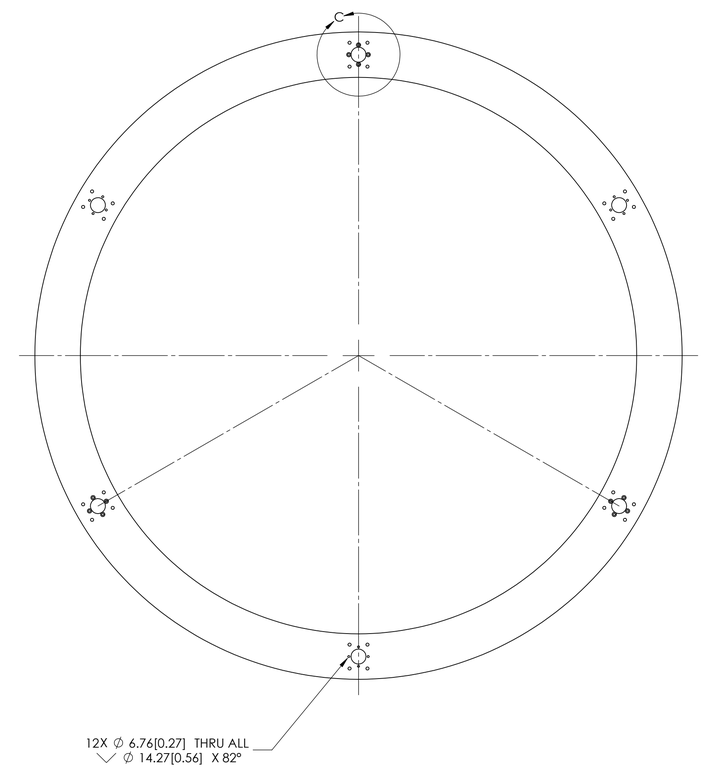

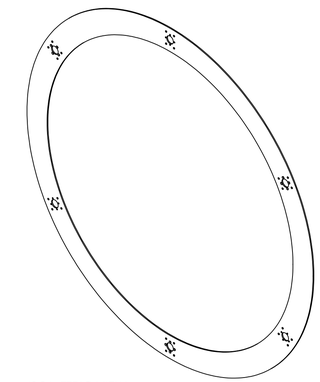

ISOMETRIC VIEW
FOR REFERENCE ONLY
SCALE: NONE

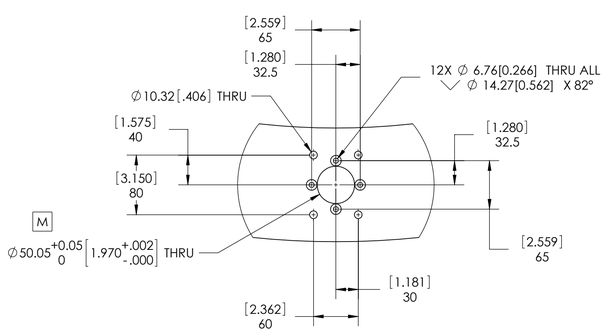

DETAIL B
SCALE 1 : 4
3 PLACES 120° APART

PROPRIETARY RIGHTS are included in all the information disclosed herein. This information is submitted in confidence, and neither this document nor the information disclosed herein shall be reproduced or transferred to any other document, nor shall it be used or disclosed to any person for manufacturing or any other reason except as specifically authorized in writing by C P Systems, Inc.

© 2011 C P Systems, Inc.

THIRD ANGLE PROJECTION

TRIANGULAR FLAG NOTE DENOTES CHANGE FROM PREVIOUS REVISION LEVEL

DO NOT SCALE DRAWING

INTERPRET DRAWING IN ACCORDANCE WITH ASME Y14.5M-1994

NEXT ASSY	USED ON
ASM-100137	KMTNet

UNLESS OTHERWISE NOTED:

ALL DIMENSIONS ARE IN MILLIMETERS AND ARE AFTER APPLIED FINISHES

TOLERANCES:

.X: ± .25 .XXX: ± .05
.XX: ± .13 ANGLES: ± 0°30'

ALL PARTS TO BE FREE OF BURRS AND SHARP EDGES

DRAWN: R. PRICE	DATE: 03 SEPT 2011		
CHECKED: -	DATE: -		
ENGINEERING: -	DATE: -		
MANUFACTURING: -	DATE: -		
APPROVED: -	DATE:		

C P SYSTEMS, INC.
P.O. BOX 780, 20705 E. MARSH STATION RD., VAIL, AZ 85641

TITLE:
RING FLEXURE

SCALE: 1:10	SIZE: D	DRAWING NO.: PRT-100134	REV.: REL-A
SHEET: 1 OF 1			

SIZE: D DRAWING NO.: PRT-100134 REV: REL-A

MATERIAL:
AISI 304 OR 303
FINISH:
NOTED
WEIGHT:
944.67 gm

REVISIONS				
ZONE	REV.	DESCRIPTION	DATE	APPROVED

NOTES:

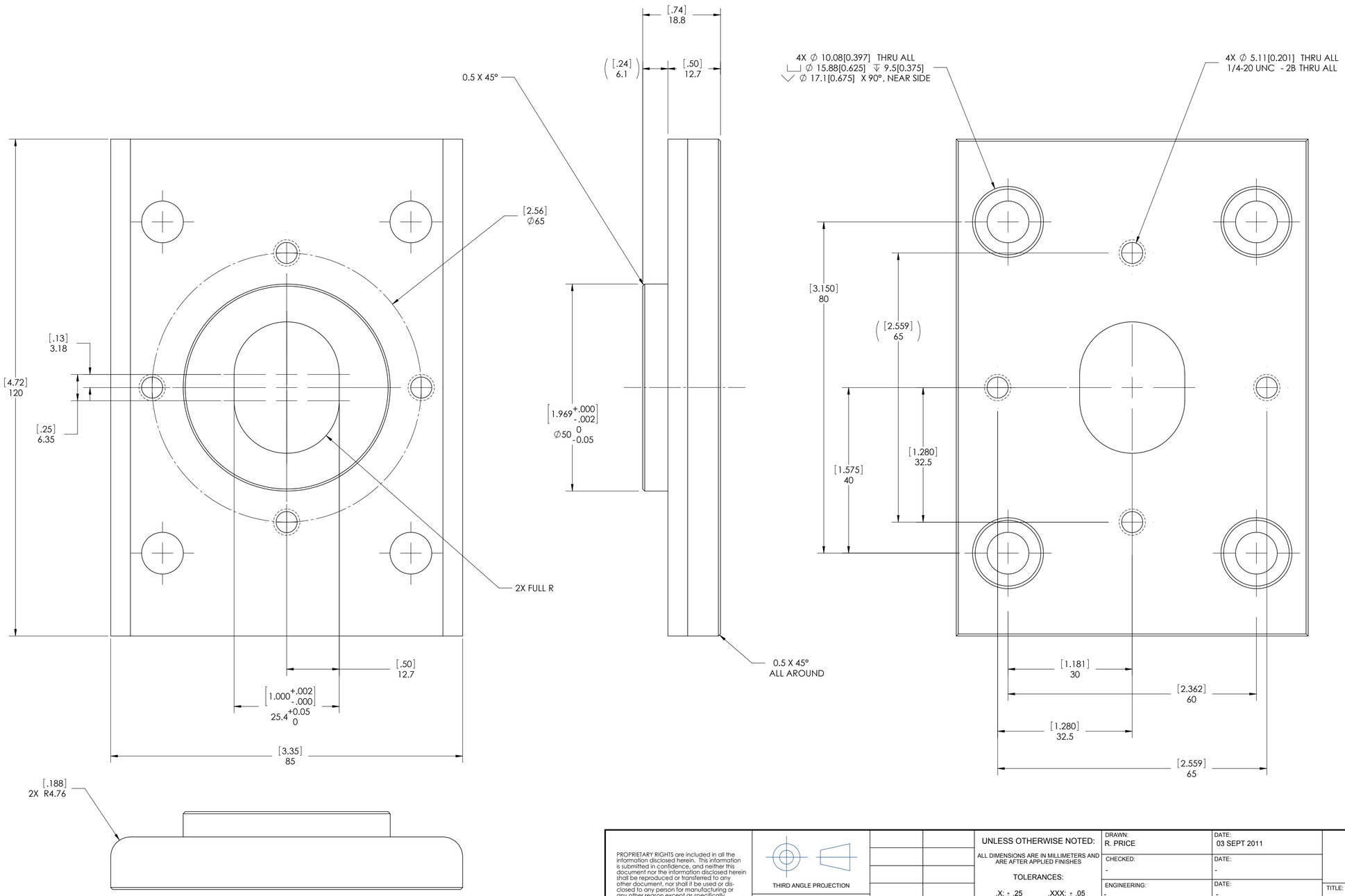

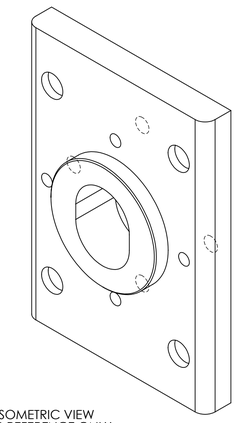

ISOMETRIC VIEW
FOR REFERENCE ONLY
SCALE: NONE

PROPRIETARY RIGHTS are included in all the information disclosed herein. This information is submitted in confidence, and neither this document nor the information disclosed herein shall be reproduced or transferred to any other document, nor shall it be used or disclosed to any person for manufacturing or any other reason except as specifically authorized in writing by C P Systems, Inc.

© 2011 C P Systems, Inc.

THIRD ANGLE PROJECTION

TRIANGULAR FLAG NOTE DENOTES CHANGE FROM PREVIOUS REVISION LEVEL

DO NOT SCALE DRAWING

INTERPRET DRAWING IN ACCORDANCE WITH ASME Y14.5M-1994

NEXT ASSY	USED ON
ASM-100137	KMTNet

UNLESS OTHERWISE NOTED:

ALL DIMENSIONS ARE IN MILLIMETERS AND ARE AFTER APPLIED FINISHES

TOLERANCES:

.X: ± .25 .XXX: ± .05
.XX: ± .13 ANGLES: ± 0°30'

ALL PARTS TO BE FREE OF BURRS AND SHARP EDGES

DRAWN: R. PRICE	DATE: 03 SEPT 2011		
CHECKED: -	DATE: -		
ENGINEERING: -	DATE: -		
MANUFACTURING: -	DATE: -		
APPROVED: -	DATE:		

C P SYSTEMS, INC.
P.O. BOX 780, 20705 E. MARSH STATION RD., VAIL, AZ 85641

TITLE:

RING FLEXURE ALIGNMENT BUSHING

SCALE: 2:1	SIZE: D	DRAWING NO.: PRT-100138	REV.: REL-A
SHEET: 1 OF 1			

REV REL-A
SIZE D DRAWING NO. PRT-100138

MATERIAL:
AISI 304 OR 303
FINISH:
NOTED
WEIGHT:
993.33 gm

REVISIONS				
ZONE	REV.	DESCRIPTION	DATE	APPROVED

NOTES:

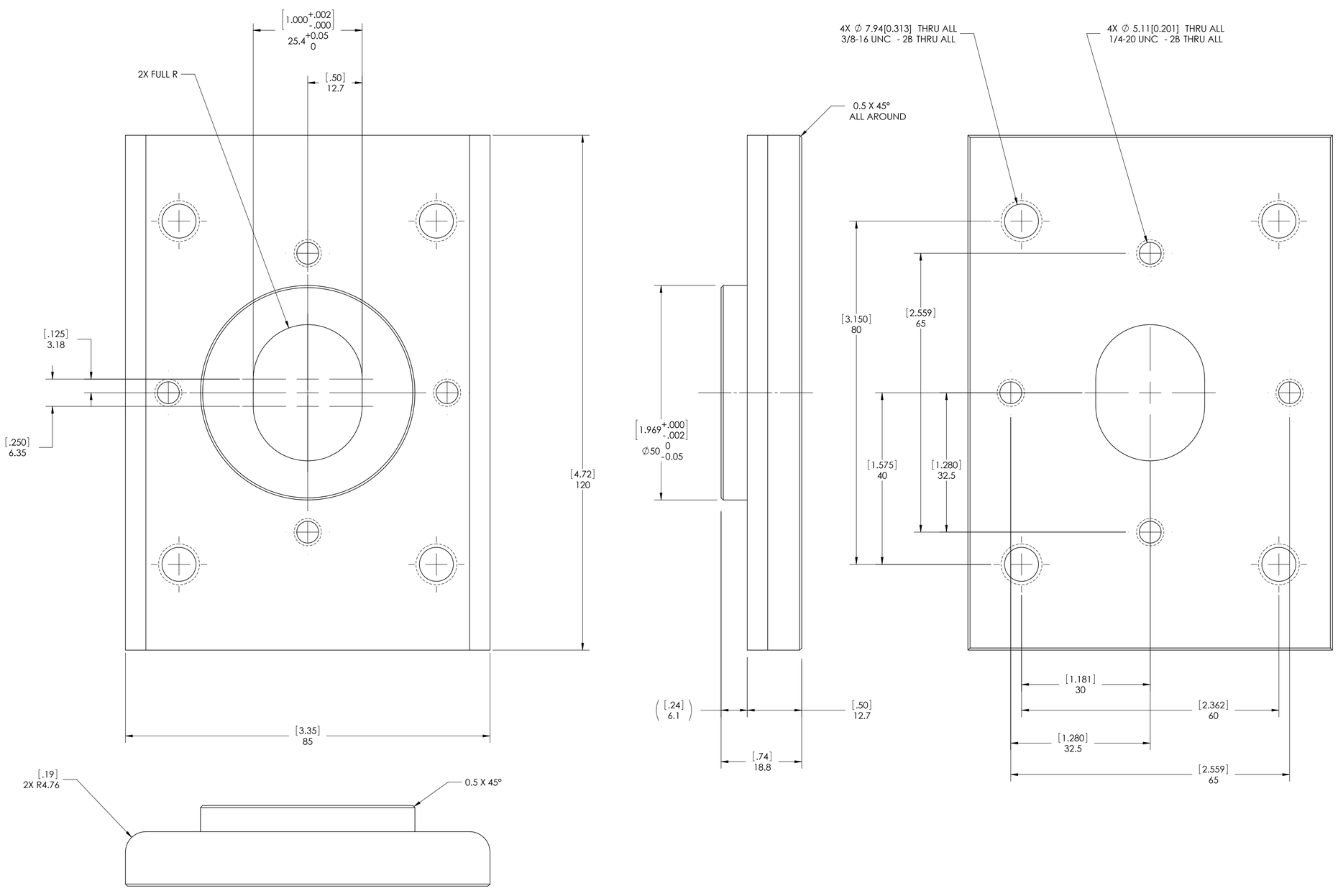

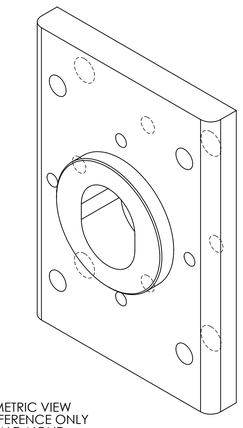

ISOMETRIC VIEW
FOR REFERENCE ONLY
SCALE: NONE

PROPRIETARY RIGHTS are included in all the information disclosed herein. This information is submitted in confidence, and neither this document nor the information disclosed herein shall be reproduced or transferred to any other document, nor shall it be used or disclosed to any person for manufacturing or any other reason except as specifically authorized in writing by C P Systems, Inc.

© 2011 C P Systems, Inc.

THIRD ANGLE PROJECTION

TRIANGULAR FLAG NOTE DENOTES CHANGE FROM PREVIOUS REVISION LEVEL

DO NOT SCALE DRAWING

INTERPRET DRAWING IN ACCORDANCE WITH ASME Y14.5M-1994

NEXT ASSY	USED ON
ASM-100137	KMTNet

UNLESS OTHERWISE NOTED:

ALL DIMENSIONS ARE IN MILLIMETERS AND ARE AFTER APPLIED FINISHES

TOLERANCES:

.X: ± .25 .XXX: ± .05
.XX: ± .13 ANGLES: ± 0°30'

ALL PARTS TO BE FREE OF BURRS AND SHARP EDGES

DRAWN: R. PRICE	DATE: 03 SEPT 2011		
CHECKED: -	DATE: -		
ENGINEERING: -	DATE: -		
MANUFACTURING: -	DATE: -		
APPROVED: -	DATE:		

C P SYSTEMS, INC.
P.O. BOX 780, 20705 E. MARSH STATION RD., VAIL, AZ 85641

TITLE:

HEAD RING ALIGNMENT BUSHING

SCALE: 2:1	SIZE: D	DRAWING NO.: PRT-100139	REV.: REL-A
SHEET: 1 OF 1			

SIZE: D DRAWING NO.: PRT-100139 REV: REL-A

MATERIAL:
ASTM A36 Steel
FINISH:
NOTED
WEIGHT:
128756.70 gm

REVISIONS				
ZONE	REV.	DESCRIPTION	DATE	APPROVED

NOTES:

1. MATERIAL: 3.00" X 6.00" X .250" WALL RECTANGULAR TUBING, ASTM A36 STEEL

[2] MACHINE FLUSH TO EXISTING INNER WALL

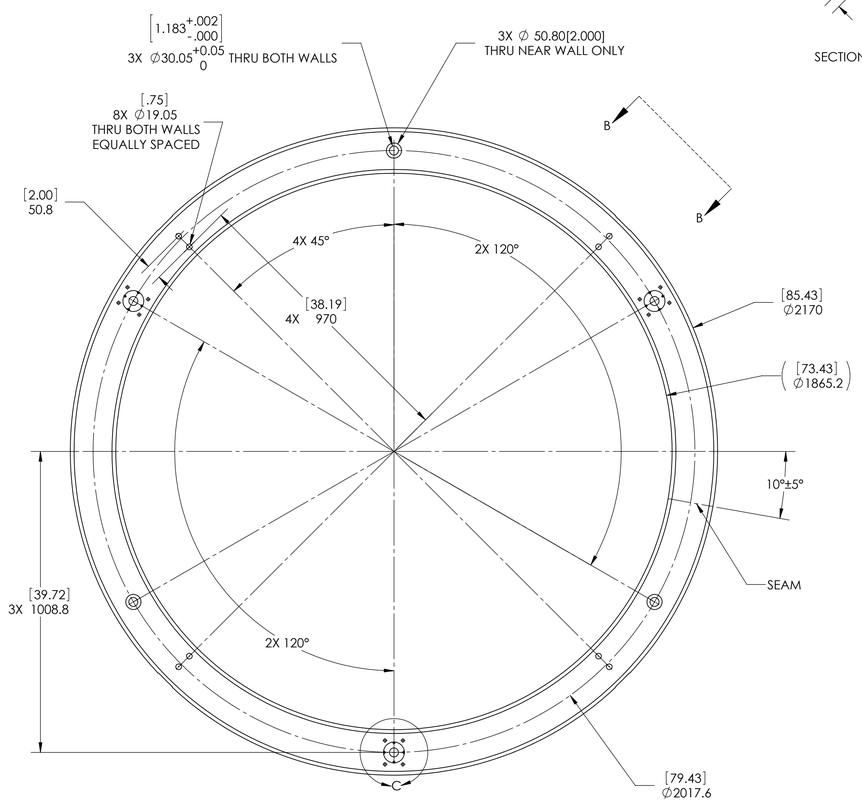

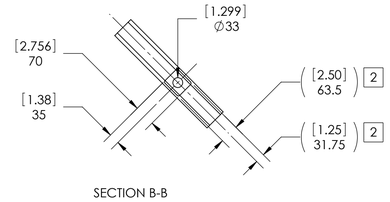

SECTION B-B

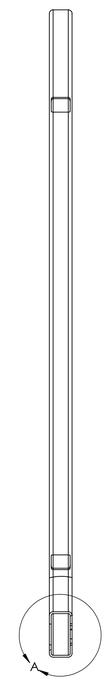

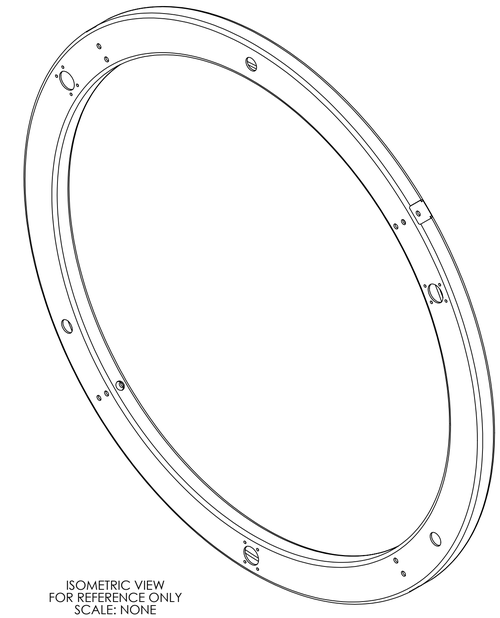

ISOMETRIC VIEW
FOR REFERENCE ONLY
SCALE: NONE

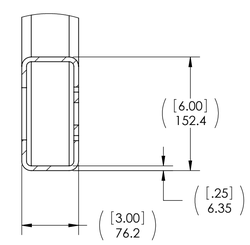

DETAIL A
SCALE 1 : 4

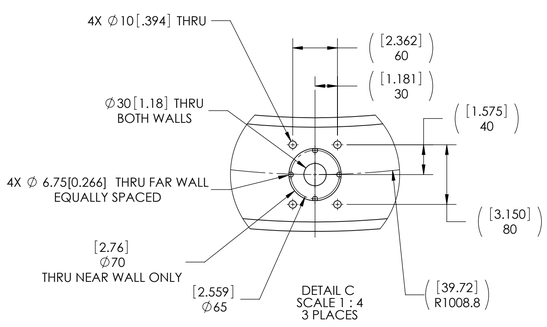

DETAIL C
SCALE 1 : 4
3 PLACES

PROPRIETARY RIGHTS are included in all the information disclosed herein. This information is submitted in confidence, and neither this document nor the information disclosed herein shall be reproduced or transferred to any other document, nor shall it be used or disclosed to any person for manufacturing or any other reason except as specifically authorized in writing by C P Systems, Inc.

© 2011 C P Systems, Inc.

THIRD ANGLE PROJECTION

TRIANGULAR FLAG NOTE DENOTES CHANGE FROM PREVIOUS REVISION LEVEL

DO NOT SCALE DRAWING

INTERPRET DRAWING IN ACCORDANCE WITH ASME Y14.5M-1994

NEXT ASSY	USED ON
ASM-100144	KMTNet

UNLESS OTHERWISE NOTED:

ALL DIMENSIONS ARE IN MILLIMETERS AND ARE AFTER APPLIED FINISHES

TOLERANCES:

.X: ± .25 .XXX: ± .05
.XX: ± .13 ANGLES: ± 0°30'

ALL PARTS TO BE FREE OF BURRS AND SHARP EDGES

DRAWN: R. PRICE	DATE: 02 OCT 2011		
CHECKED: -	DATE: -		
ENGINEERING: -	DATE: -		
MANUFACTURING: -	DATE: -		
APPROVED: -	DATE:		

C P SYSTEMS, INC.
P.O. BOX 780, 20705 E. MARSH STATION RD., VAIL, AZ 85641

TITLE: HEAD RING

SCALE: 1:10	SIZE: D	DRAWING NO.: PRT-100140	REV.: REL-A
SHEET: 1 OF 1			

REV REL-A
SIZE: D DRAWING NO.: PRT-100140

MATERIAL:
AISI 304 / 303
FINISH:
NOTED
WEIGHT:
1525.78 gm

REVISIONS				
ZONE	REV.	DESCRIPTION	DATE	APPROVED
	A	INITIAL RELEASE	13 NOV 2011	RSP
	B	ZONE C7: DELETED 10° CHAMFER AND ADDED R3.18	4/30/2012	RSP

NOTES:

1. TWO PIECE CONSTRUCTION NOT PERMISSIBLE.

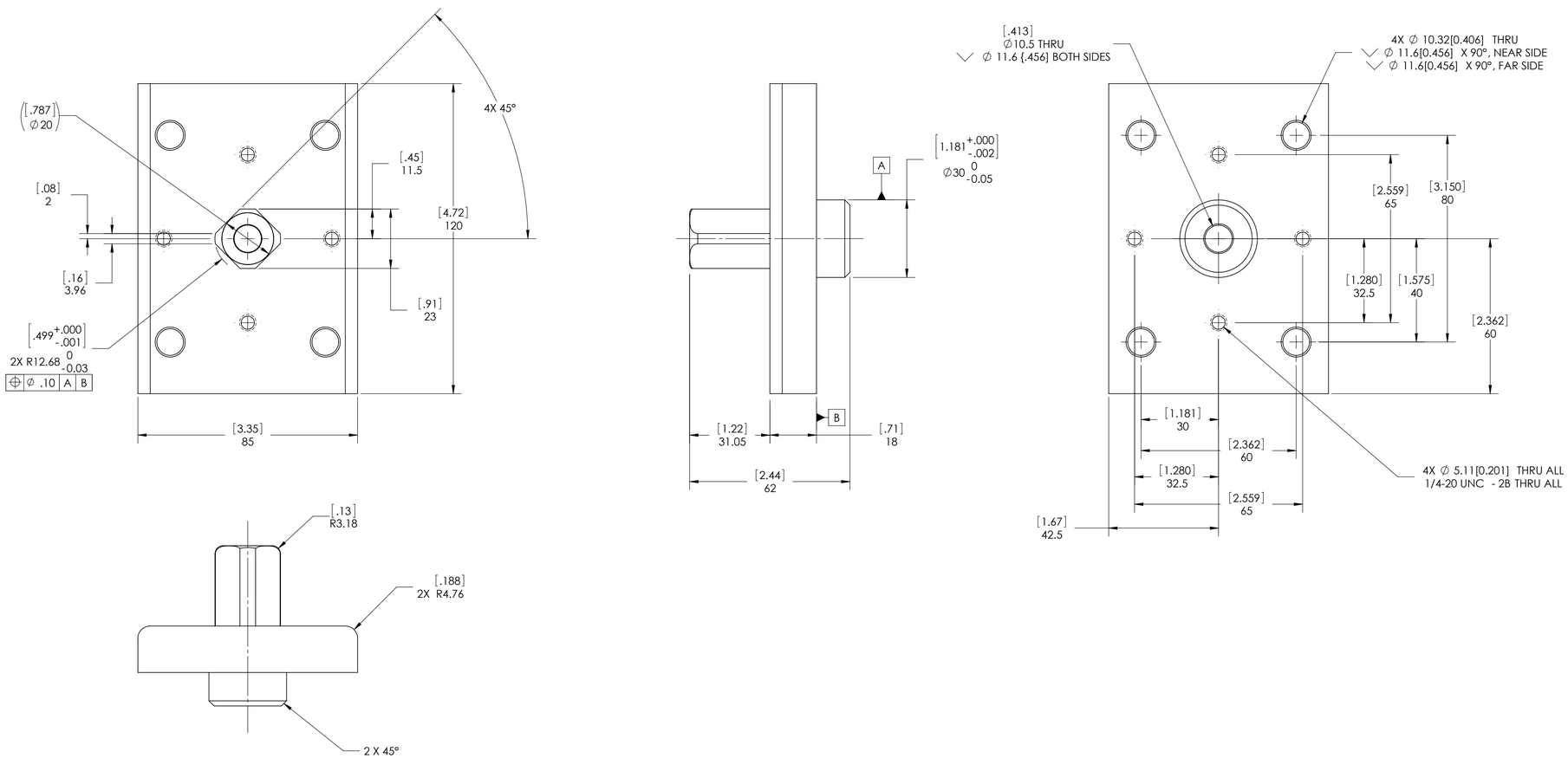

ISOMETRIC VIEW
FOR REFERENCE ONLY
SCALE: NONE

PROPRIETARY RIGHTS are included in all the information disclosed herein. This information is submitted in confidence, and neither this document nor the information disclosed herein shall be reproduced or transferred to any other document, nor shall it be used or disclosed to any person for manufacturing or any other reason except as specifically authorized in writing by C P Systems, Inc.

© 2011 C P Systems, Inc.

THIRD ANGLE PROJECTION

TRIANGULAR FLAG NOTE DENOTES CHANGE FROM PREVIOUS REVISION LEVEL

DO NOT SCALE DRAWING

INTERPRET DRAWING IN ACCORDANCE WITH ASME Y14.5M-1994

ASM-100143	KMTNet
NEXT ASSY	USED ON

UNLESS OTHERWISE NOTED:

ALL DIMENSIONS ARE IN MILLIMETERS AND ARE AFTER APPLIED FINISHES

TOLERANCES:

.X: ± .25 .XXX: ± .05
.XX: ± .13 ANGLES: ± 0°30'

ALL PARTS TO BE FREE OF BURRS AND SHARP EDGES

DRAWN: R. PRICE	DATE: 13 NOV 2011
CHECKED: -	DATE: -
ENGINEERING: -	DATE: -
MANUFACTURING: -	DATE: -
APPROVED: -	DATE:

C P SYSTEMS, INC.
P.O. BOX 780, 20705 E. MARSH STATION RD., VAIL, AZ 85641

TITLE:

DIAMOND PIN LOCATOR, HEAD RING

SCALE: 1:1	SIZE: D	DRAWING NO.: PRT-100141	REV.: B
SHEET: 1 OF 1			

REV B
SIZE: D DRAWING NO.: PRT-100141

MATERIAL:
ASTM A36 Steel
FINISH:
NOTED
WEIGHT:
4205.10 gm

REVISIONS				
ZONE	REV.	DESCRIPTION	DATE	APPROVED

NOTES:

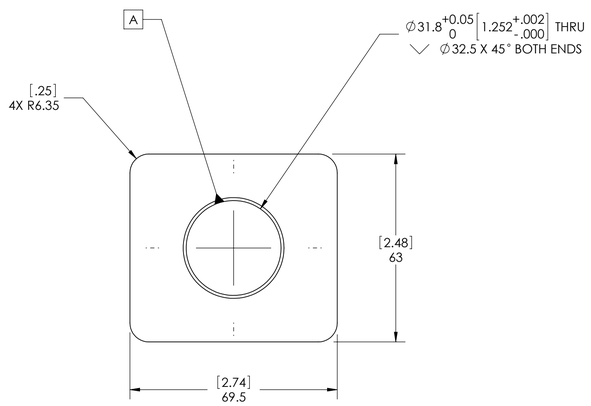

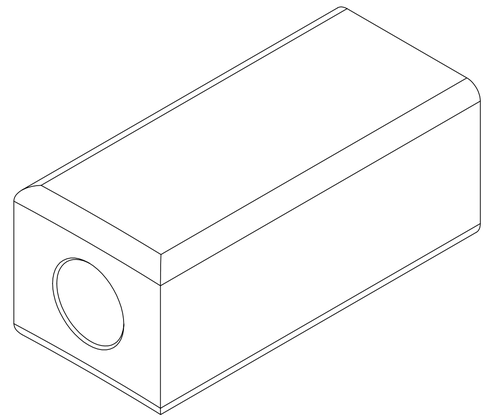

ISOMETRIC VIEW
FOR REFERENCE ONLY
SCALE: NONE

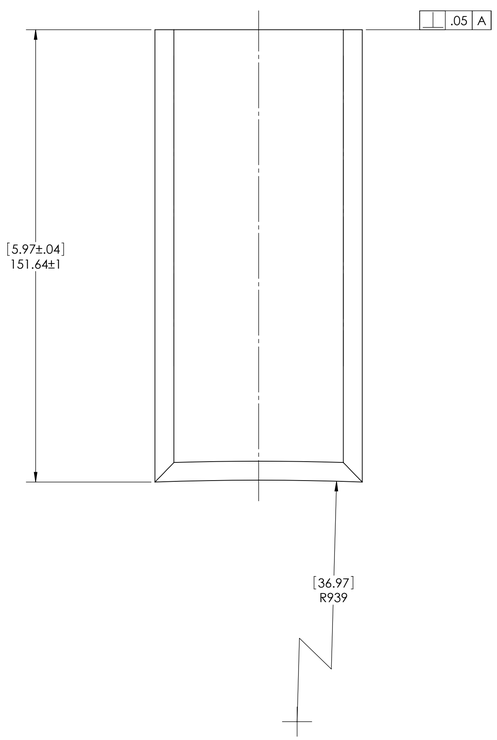

PROPRIETARY RIGHTS are included in all the information disclosed herein. This information is submitted in confidence, and neither this document nor the information disclosed herein shall be reproduced or transferred to any other document, nor shall it be used or disclosed to any person for manufacturing or any other reason except as specifically authorized in writing by C P Systems, Inc.

© 2011 C P Systems, Inc.

THIRD ANGLE PROJECTION

TRIANGULAR FLAG NOTE DENOTES CHANGE FROM PREVIOUS REVISION LEVEL

DO NOT SCALE DRAWING

INTERPRET DRAWING IN ACCORDANCE WITH ASME Y14.5M-1994

NEXT ASSY	USED ON
ASM-100144	KMTNet

UNLESS OTHERWISE NOTED:

ALL DIMENSIONS ARE IN MILLIMETERS AND ARE AFTER APPLIED FINISHES

TOLERANCES:

.X: ± .25 .XXX: ± .05
.XX: ± .13 ANGLES: ± 0°30'

ALL PARTS TO BE FREE OF BURRS AND SHARP EDGES

DRAWN: R. PRICE	DATE: 02 OCT 2011
CHECKED: -	DATE: -
ENGINEERING: -	DATE: -
MANUFACTURING: -	DATE: -
APPROVED: -	DATE:

C P SYSTEMS, INC.

P.O. BOX 780, 20705 E. MARSH STATION RD., VAIL, AZ 85641

TITLE:

SPIDER SUPPORT BLOCK

SCALE: 1:1	SIZE: D	DRAWING NO.: PRT-100142	REV.: REL-A
SHEET: 1 OF 1			

REV REL-A

SIZE: D DRAWING NO.: PRT-100142

MATERIAL:	6061 Alloy T6
FINISH:	NOTED
WEIGHT:	5745.93 gm

NOTES:

1. FINISH: CHEMICAL FILM PER MIL-C-5541, CLASS 1A

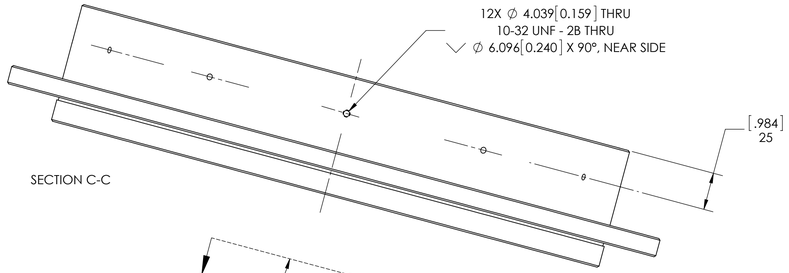

SECTION C-C

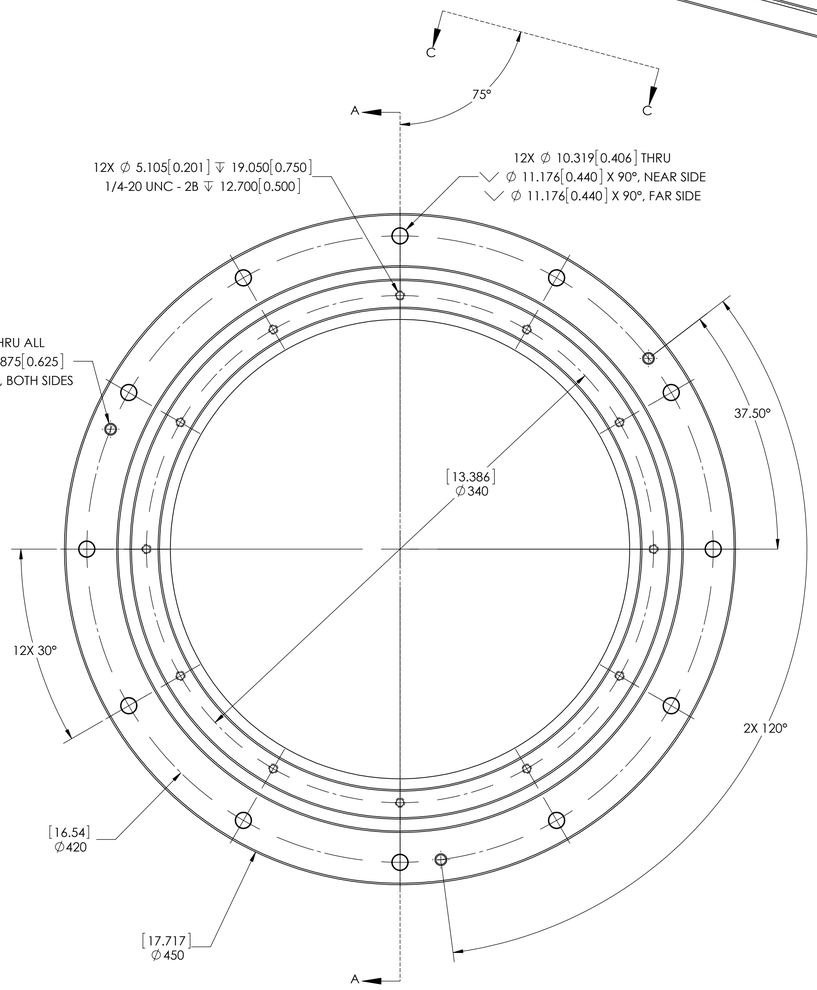

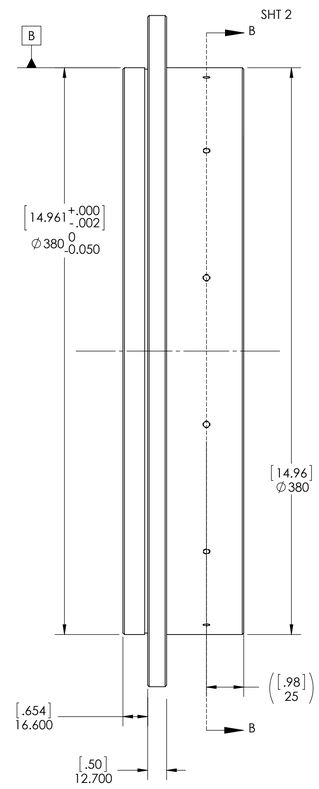

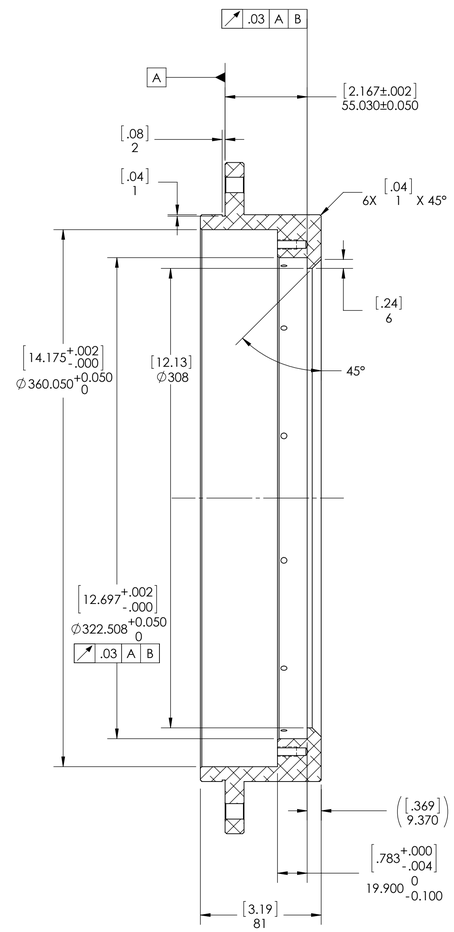

SECTION A-A

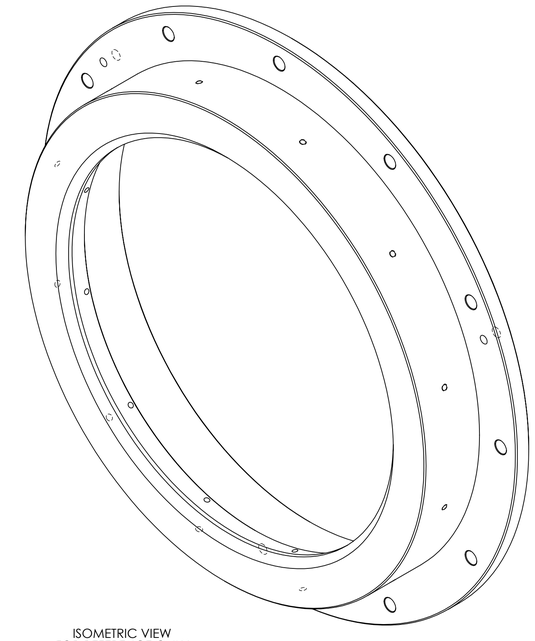

ISOMETRIC VIEW
FOR REFERENCE ONLY
SCALE: NONE

PROPRIETARY RIGHTS are included in all the information disclosed herein. This information is submitted in confidence, and neither this document nor the information disclosed herein shall be reproduced or transferred to any other document, nor shall it be used or disclosed to any person for manufacturing or any other reason except as specifically authorized in writing by CP Systems, Inc.

© 2009 CP Systems, Inc.

THIRD ANGLE PROJECTION

TRIANGULAR FLAG NOTE DENOTES CHANGE FROM PREVIOUS REVISION LEVEL

DO NOT SCALE DRAWING

INTERPRET DRAWING IN ACCORDANCE WITH ASME Y14.5M-1994

NEXT ASSY	USED ON
ASM-100060-TEST	KMTNet

UNLESS OTHERWISE NOTED:

ALL DIMENSIONS ARE IN MILLIMETERS AND ARE AFTER APPLIED FINISHES

TOLERANCES:

.X: ± .25 .XXX: ± .05
.XX: ± .13 ANGLES: ± 0°30'

ALL PARTS TO BE FREE OF BURRS AND SHARP EDGES

DRAWN: R. PRICE	DATE: 13 JUNE 2012		
CHECKED: -	DATE: -		
ENGINEERING: -	DATE: -		
MANUFACTURING: -	DATE: -		
APPROVED: -	DATE:		

CP SYSTEMS, INC.
P.O. BOX 780, 20705 E. MARSH STATION ROAD, VAIL, AZ 85641

TITLE: LENS NO. 4 CELL-TEST

SCALE: 1:2	SIZE: D	DRAWING NO.: PRT-100181	REV.: A-07
SHEET: 1 OF 2			

SIZE: D DRAWING NO. PRT-100181 REV A-07

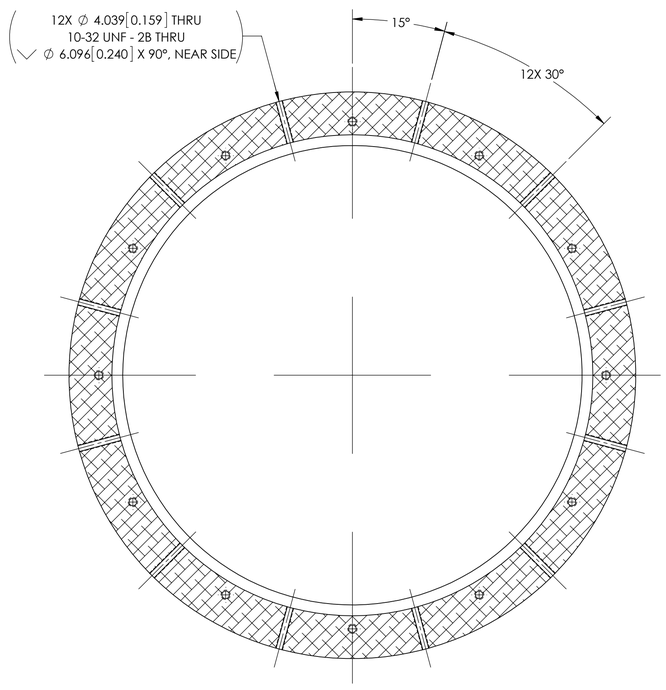

SECTION B-B

PROPRIETARY RIGHTS are included in all the information disclosed herein. This information is submitted in confidence, and neither this document nor the information disclosed herein shall be reproduced or transferred to any other document, nor shall it be used or disclosed to any person for manufacturing or any other reason except as specifically authorized in writing by CP Systems, Inc.

© 2009 CP Systems, Inc.

CP SYSTEMS, INC.

P.O. BOX 780, 20705 E. MARSH STATION ROAD, VAIL, AZ 85641

SCALE: 1:2	SIZE: D	DRAWING NO.: PRT-100181	REV.: A-07
SHEET: 2 OF 2			

REV.: A-07
SIZE: D DRAWING NO.: PRT-100181

MATERIAL:	DELRIN, BLACK
FINISH:	NOTED
WEIGHT:	20.40 gm

NOTES:

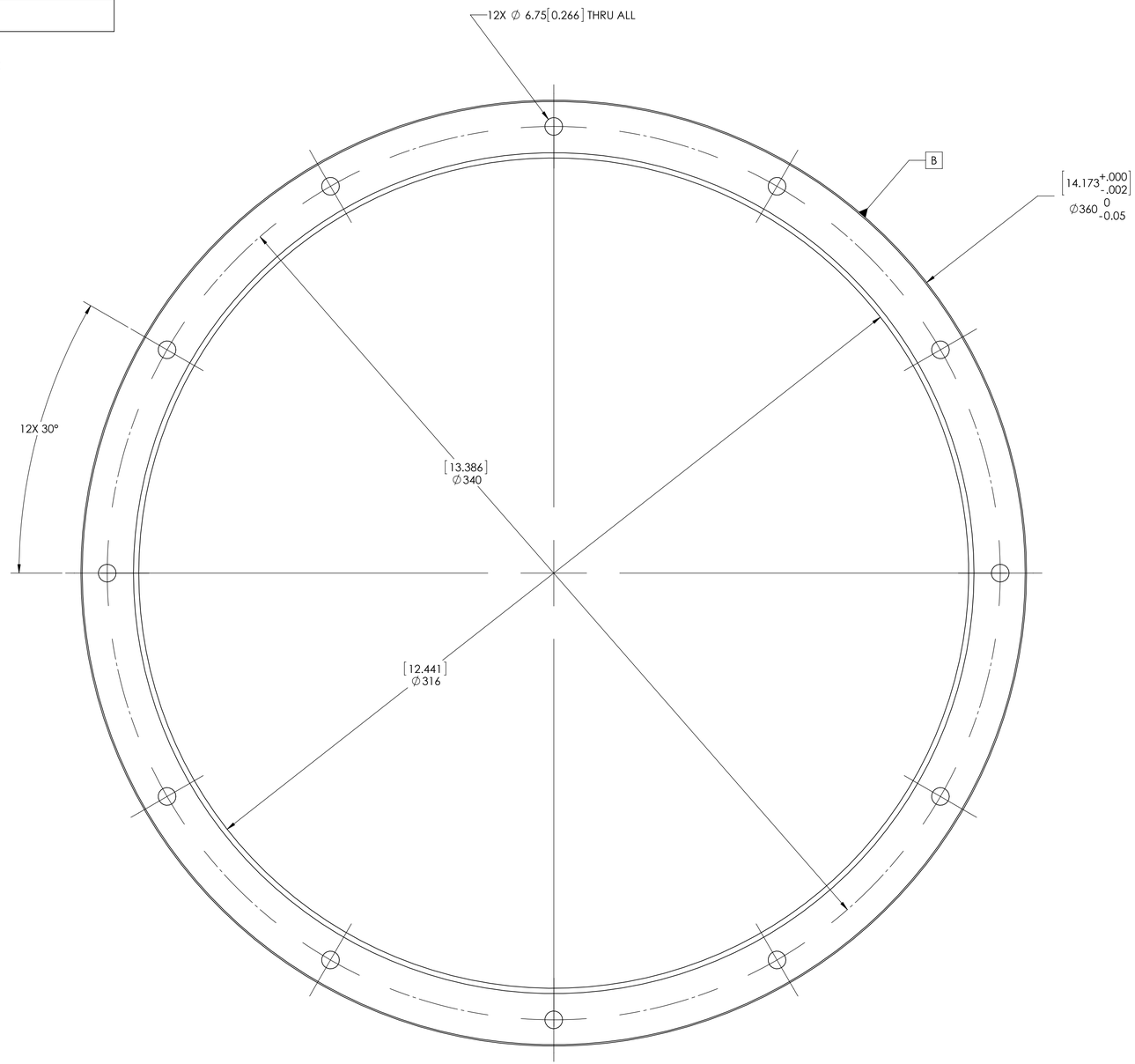

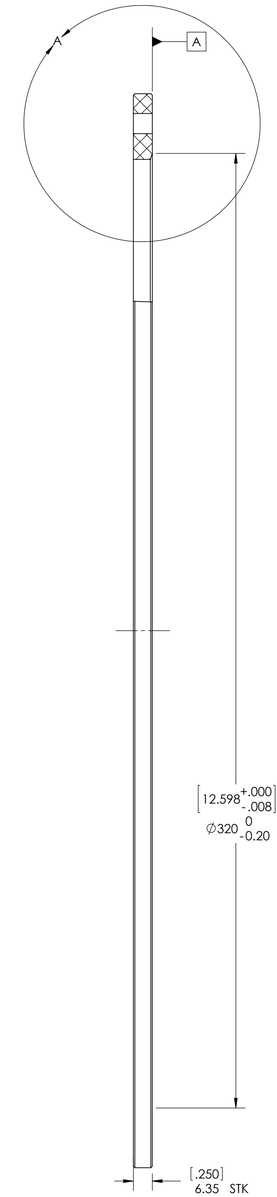

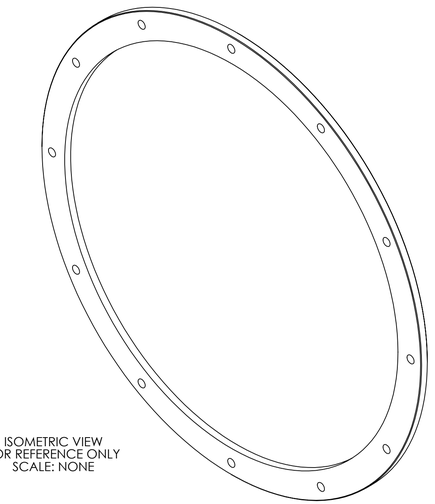

ISOMETRIC VIEW
FOR REFERENCE ONLY
SCALE: NONE

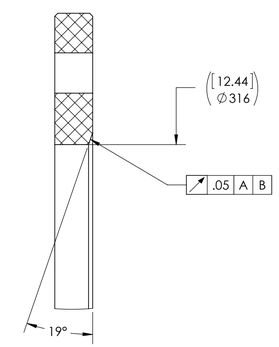

DETAIL A
SCALE 2 : 1

PROPRIETARY RIGHTS are included in all the information disclosed herein. This information is submitted in confidence, and neither this document nor the information disclosed herein shall be reproduced or transferred to any other document, nor shall it be used or disclosed to any person for manufacturing or any other reason except as specifically authorized in writing by CP Systems, Inc.

© 2009 CP Systems, Inc.

THIRD ANGLE PROJECTION

TRIANGULAR FLAG NOTE DENOTES CHANGE FROM PREVIOUS REVISION LEVEL

DO NOT SCALE DRAWING

INTERPRET DRAWING IN ACCORDANCE WITH ASME Y14.5M-1994

NEXT ASSY	USED ON
ASM-100109	KMTNet

UNLESS OTHERWISE NOTED:

ALL DIMENSIONS ARE IN MILLIMETERS AND ARE AFTER APPLIED FINISHES

TOLERANCES:

.X: ± .25 .XXX: ± .05
.XX: ± .13 ANGLES: ± 0°30'

ALL PARTS TO BE FREE OF BURRS AND SHARP EDGES

DRAWN:	R. PRICE	DATE:	08 OCT 2011
CHECKED:	-	DATE:	-
ENGINEERING:	-	DATE:	-
MANUFACTURING:	-	DATE:	-
APPROVED:	-	DATE:	

CP SYSTEMS, INC.

P.O. BOX 780, 20705 E. MARSH STATION ROAD, VAIL, AZ 85641

TITLE:

LENS NO. 4 RETAINER

SCALE: 1:2	SIZE: D	DRAWING NO.: PRT-100182	REV.: A-04
SHEET: 1 OF 1			

REV A-04

SIZE D DRAWING NO. PRT-100182